MODULYS GP

Green Power 2.0 range
from 25 to 200 kVA

Installations- und bedienungsanleitung DE
Manual de instalación y uso ES
Manuel d'installation et d'utilisation FR
Installation and operating manual GB
Manuale di installazione e uso IT

socomec
Innovative Power Solutions

CERTIFICATE AND CONDITIONS OF WARRANTY

This SOCOMEC continuous power system is guaranteed against any manufacturing or material defects.

The warranty is valid for 12 (twelve) months from the commission date, provided activation is carried out by SOCOMEC personnel or personnel from a support centre authorised by SOCOMEC, and no more than 15 (fifteen) months from being shipped from SOCOMEC.

The warranty is valid throughout national territory. If the UPS is exported abroad, the warranty will only cover the parts used to repair faults.

The warranty is valid ex-works and covers labour and parts used to repair the faults.

The warranty shall not apply in the following cases:

- Failure due to unforeseen circumstances or force majeure (lightning, floods, etc.);
- Failure due to negligence or improper use (use outside limits: temperature, humidity, ventilation, electric power supply, applied load, batteries);
- Insufficient or inappropriate maintenance;
- When maintenance, repairs or modifications have not carried been out by SOCOMEC personnel, or personnel from a support centre authorised by SOCOMEC.
- If the battery has not been recharged in accordance with the terms indicated on the packaging and in the manual, in the event of long periods of storage or UPS inactivity.

SOCOMEC may, at its own discretion, opt for the repair of the product or the replacement of faulty or defective parts with new parts, or with used parts of equivalent quality to new parts with regard to function and performance.

Defective or faulty parts replaced free of charge must to be made available to SOCOMEC, which becomes the sole owner.

Replacement or repair of parts, or any modifications to the product during the warranty period, will not extend the duration of the warranty.

SOCOMEC will not be responsible for damages under any circumstances (including, without limitations, damage for loss of earnings, interruption of activity, loss of information or other financial losses) arising from the use of the product.

These conditions are subject to Italian law. Any disputes fall under the jurisdiction of the Court of Vicenza.

SUMMARY

1. SAFETY STANDARDS

This user manual specifies installation and maintenance procedures, technical data and safety instructions for SOCOMEC. For further information visit the Socomec website: www.socomec.com.

NOTE!
Any work carried out on the equipment must be performed by skilled, qualified technicians.

NOTE!
Before carrying out any operations on the unit read the installation and operating manual carefully. Keep this manual safe for future reference.

DANGER!
Failure to observe safety standards could result in fatal accidents or serious injury, and damage equipment or the environment.

CAUTION!
If the unit is found to be damaged externally or internally, or any of the accessories are damaged or missing, contact SOCOMEC. Do not operate the unit if it has suffered a violent mechanical shock of any kind.

NOTE!
Install the unit in accordance with clearances in order to prevent access to handling devices and guarantee sufficient ventilation (refer to 'Environmental requirements' chapter).

NOTE!
Only use accessories recommended or sold by the manufacturer.

NOTE!
When the equipment is transferred from a cold to a warm place wait approx. two hours before putting the unit into operation.

NOTE!
When carrying out electrical installation, all standards applicable specified by the IEC, in particular IEC 60364, and the electricity supplier must be observed. All national standards applicable to batteries must be observed. For further information refer to 'Technical specification' chapter.

WARNING!
Connect the protective earth (PE) conductor before making any other connections.

NOTE!
The installer is responsible for implementing the backfeed protection with the use of AC input line isolation devices external to the UPS. Refer to 'Electrical requirements' chapter.

DANGER! RISK OF ELECTRIC SHOCK!
Before carrying out any operations on the unit (cleaning and maintenance performances, connection of appliances, etc.) disconnect all power sources.

DANGER! RISK OF ELECTRIC SHOCK!
After disconnecting all power sources wait approx. 5 minutes for the complete discharge of the unit.

NOTE!
The UPS may be powered from an IT distribution system with a neutral conductor.

NOTE!
Any use other than the specified purpose will be considered improper. The manufacturer/supplier shall not be held responsible for damage resulting from this. Risk and responsibility lies with the system manager.

NOTE! The product you have chosen is designed for commercial and industrial use only. In order to be used for particular critical applications such as life support systems, medical applications, commercial transportation, nuclear facilities or any other application or systemwhere product failure is likely to cause substantial harm to people or property, the products may have to be adapted. For such uses we would advise you to contact SOCOMEC beforehand to confirm the ability of these products to meet the requested level of safety, performance, reliability and compliance with applicable laws, regulations and specifications.

NOTE!
This is a product for commercial and industrial application – installation restrictions or additional measures may be needed to prevent disturbances.

1.1. DESCRIPTION OF SYMBOLS

All interior and exterior precautions and warnings on labels and plates on the equipment should be complied with.

DANGER! High voltage (black/yellow)

Protective earth terminal (PE)

Read the user manual before using the unit

It is forbidden for non-qualified personnel to work on the batteries.

Do not smoke, use naked flames or generate sparks in the vicinity of the accumulators.

Accumulators are heavy! Use suitable transport and lifting equipment to work safely.

Connecting accumulators in series creates hazardous voltages.

The electrolyte corrodes metals and burns the skin and all parts of the human body.

WARNING!
Risk of explosion! Avoid short circuits! Never place tools or metal objects on the accumulators.

Wear safety goggles and suitable clothing.

Read the user instructions carefully.
Read the user manual before performing any operations.

Wear protective gloves and clothing.

In the event of contact with the eyes, wash immediately with plenty water and call a doctor. Call a doctor immediately in the event of accidents or illness.

The unit MUST be handled by at least two people.

Batteries and related parts contain lead. Lead is dangerous to health if ingested. Wash hands after handling!

We advise you to contact SOCOMEC beforehand to confirm the ability of these products to meet the required level of safety, performance, reliability and compliance with applicable laws, regulations and specifications.

2. ENVIRONMENTAL REQUIREMENTS AND HANDLING

NOTE!
Before carrying out any operations on the unit read the Safety standards chapter carefully.

2.1. ENVIRONMENTAL REQUIREMENTS

Install the unit in an equipment room where only skilled technicians have access. The room must be:

- of a suitable size
- free from conductive, inflammable and corrosive items;
- not exposed directly to sunlight.

The floor must support the weight of the unit and guarantee its stability. The unit is designed for indoor non-air-conditioned rooms only.

2.1-1 Top air vent (optional)

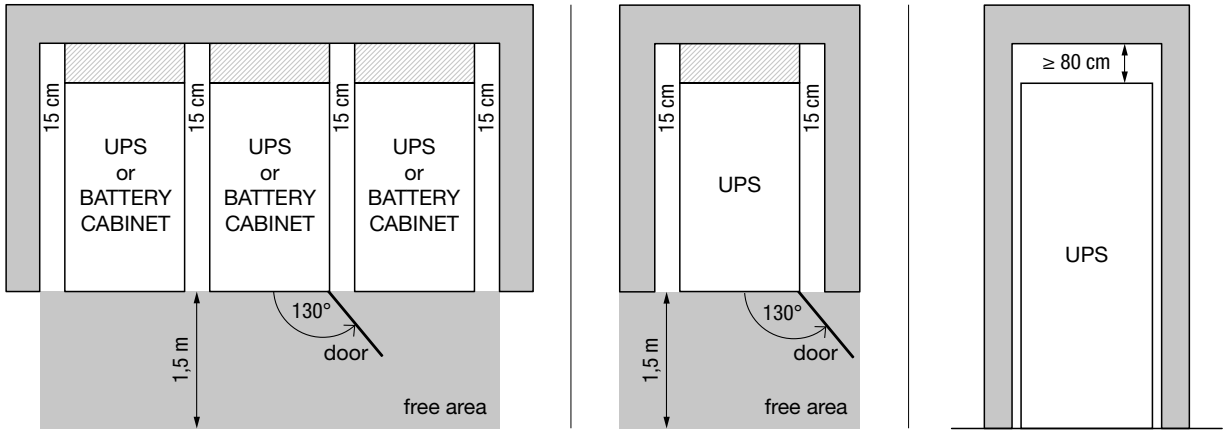

2.1-2 Rear air vent

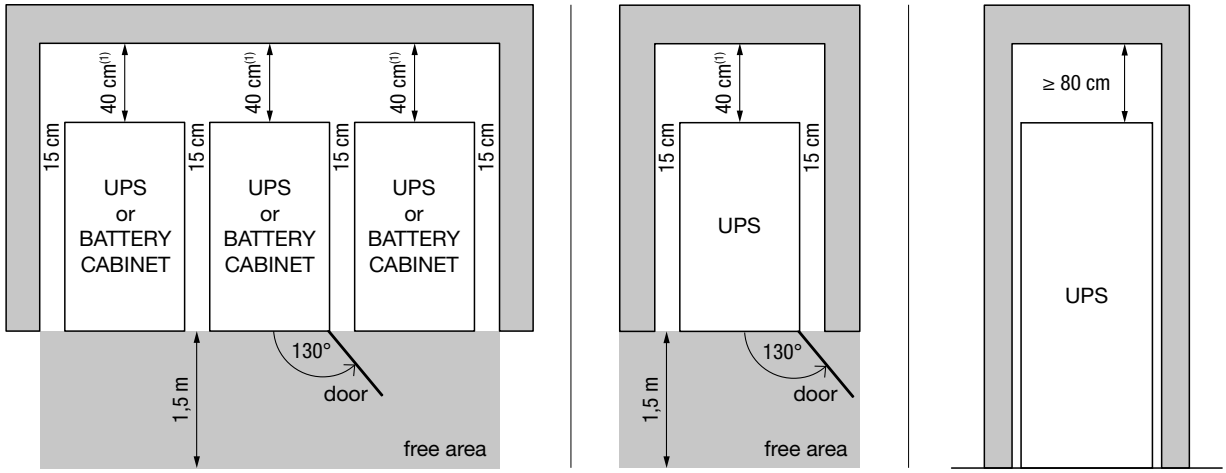

1. Up to 7+1 modules; 60 cm if 8+0 modules.

2.2. HANDLING

- The packaging guarantees the stability of the unit during shipping and physical transfer.
- The unit must remain in a vertical position during all shipping and handling operations.
- Ensure that the floor is strong enough to support the weight of the unit.
- Carry the packaged unit as close as possible to the installation site.

WARNING! HEAVY WEIGHT!
Move the unit using a fork lift truck taking the utmost caution at all times.

The unit MUST be handled by at least two people. The people MUST take position at the sides of the UPS with respect to the direction of movement.

Do not move the unit by putting pressure on the front door.

When moving the unit on even slightly sloping surfaces, use the locking equipment and braking devices to ensure that the unit does not fall over.

WARNING!
The following instructions must be carried out prior to moving the unit (after initial positioning).
Failure to heed this warning could result in the unit falling over, equipment damage, injury and even death.

WARNING! RISK OF TIPPING OVER!
The four feet must be secured evenly to ensure the unit is stable.

2.2-1

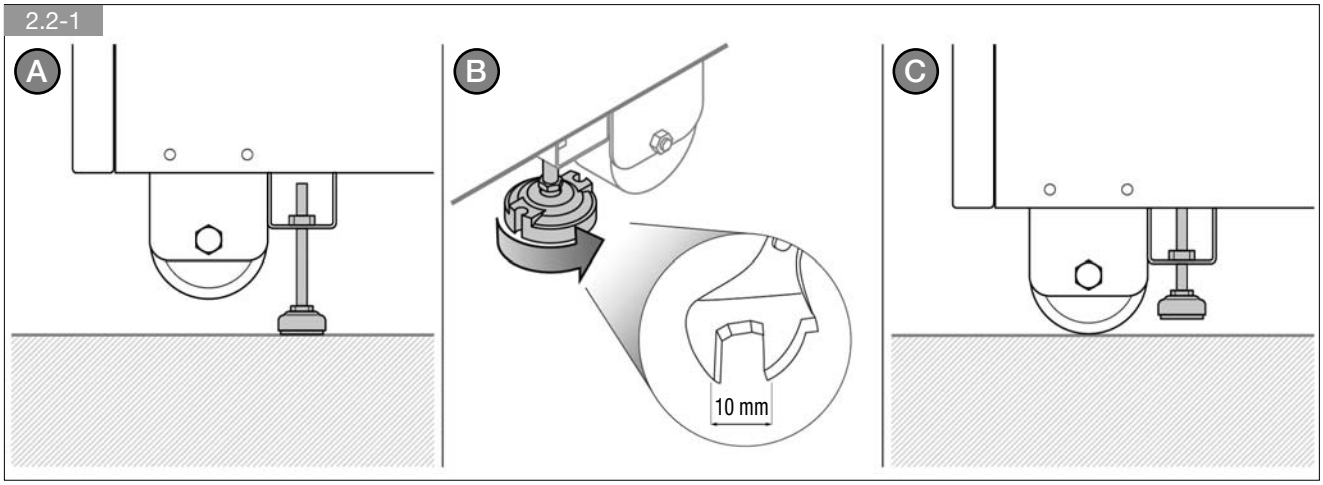

2.3. FLOOR MOUNTING

Refer to 'connections' chapter.

3. ELECTRICAL INSTALLATION

NOTE!
Before carrying out any operations on the unit read the Safety standards chapter carefully.

3.1. ELECTRICAL REQUIREMENTS

The installation and system must comply with national plant regulations.

The electrical distribution panel must have a sectioning and protection system installed for input and auxiliary mains.

RCD is not necessary when the UPS is installed in a TN-S system.

RCD is not allowed on TN-C systems.

If a RCD is required a B-type should be used.

Size of input protection devices											
Model rating	**Breaker Input[1]**		**Breaker Aux. Mains[1][4]**		**Differential input[3]**	**Input/Output cable core size**		**Aux cable core size**		**Battery cable core size**	
(kVA)	(A)		(A)		(A)	(mm^2)		(mm^2)		(mm^2)	
	Min	Max	Min	Max	Min	flexible cable	rigid cable	flexible cable	rigid cable	flexible cable	rigid cable
						max[2]	max[2]	max[2]	max[2]	max[2]	max[2]
25	50	400	50	400	0,5	2x150	2x150	2x150	2x150	2x150	2x150
50	100	400	100	400	0,5	2x150	2x150	2x150	2x150	2x150	2x150
75	160	400	160	400	0,5	2x150	2x150	2x150	2x150	2x150	2x150
100	200	400	200	400	0,5	2x150	2x150	2x150	2x150	2x150	2x150
125	250	400	250	400	0,5	2x150	2x150	2x150	2x150	2x150	2x150
150	320	400	320	400	0,5	2x150	2x150	2x150	2x150	2x150	2x150
175	400	400	400	400	0,5	2x150	2x150	2x150	2x150	2x150	2x150
200	400	400	400	400	0,5	2x150	2x150	2x150	2x150	2x150	2x150

1. *Circuit breaker switch recommended with magnetic intervention threshold ≥10 In (curve C). It is necessary to use a D curve selective breaker if an optional external transformer is used. The min value depends on the size of the power cables in the installation, while the max value is limited by the UPS cabinet.*
2. *Determined by the size of the terminals.*
3. *Caution! Use type B four-pole selective (S) residual current detectors. Load leakage currents are to be added to those generated by the UPS and during transitory phases (power failures and power returns) short current peaks may occur. If loads with high leakage current are present, adjust the residual current protection. It is advisable in all cases to carry out a preliminary check on the earth current leakage with the UPS installed and operational with the definitive load, so as to prevent the RCD tipping over.*
4. *The conditional short circuit current (Icc) according to IEC 62040-1 is 50KA rms, provided that the UPS is protected by a MCCB with adequate breaking capability and current limiting capability under short circuit conditions. Contact SOCOMEC for detailed information.*

NOTE!
To ensure the integrity of the bypass thyristors I2t must be lower than 400 kA2s and peak current must be lower than 9 kA for 20 ms. Contact SOCOMEC for detailed information.

The UPS is designed for transient overvoltages in category II installations. If the UPS is part of the building's electrical circuit, or is likely to be subject to transient overvoltages in category III installations, additional external protection must be provided, either on the UPS or in the AC power supply network powering the UPS.

WARNING!
As specified in 62040-3 Appendix 3: Non-linear Load Reference, in the event of three-phase non-linear loads connected downstream of the UPS, the neutral current on the load can be 1.5 - 2 times higher than the phase current. This must be considered when estimating the correct size of the output and the auxiliary neutral cables.

WARNING!
Protective earthing conductor (PE) must have sufficient current-carrying capacity. The PE cable core size must be chosen according to the PROTECTIVE CURRENT RATING of the earth circuit which depends on the provision and location of protective overcurrent devices.

NOTE!
3-Phase 4 –Wire Input Power is required. The unit can be installed in TN, TT and IT AC distribution systems (IEC 60364-3).

BACKFEED PROTECTION

The UPS is set up for the installation of external protection devices against the backfeed of dangerous voltages on the auxiliary backup mains power supply line (AUX MAINS SUPPLY). The current rating of the switching device has to follow the instruction outlined in chapter 'Electrical Requirements'.

DANGER! RISK OF ELECTRIC SHOCK!
The installer must attach the warning label in order to warn electrical technicians about dangerous backfeed situations (not caused by the UPS).

3.1-1 Warning label (supplied with the equipment)

Before working on this circuit
- Isolate the Uninterruptible Power System (UPS)
- Then check for Hazardous Voltage between all terminals including the protective earth

Risk of Voltage Backfeed

3.1-2 Backfeed electrical diagram

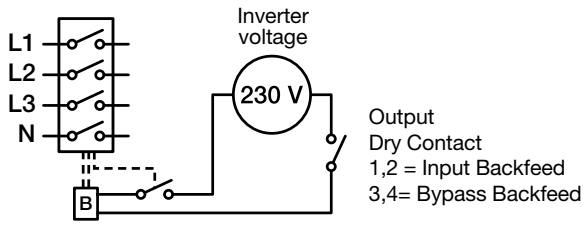

3.1-3 Backfeed card

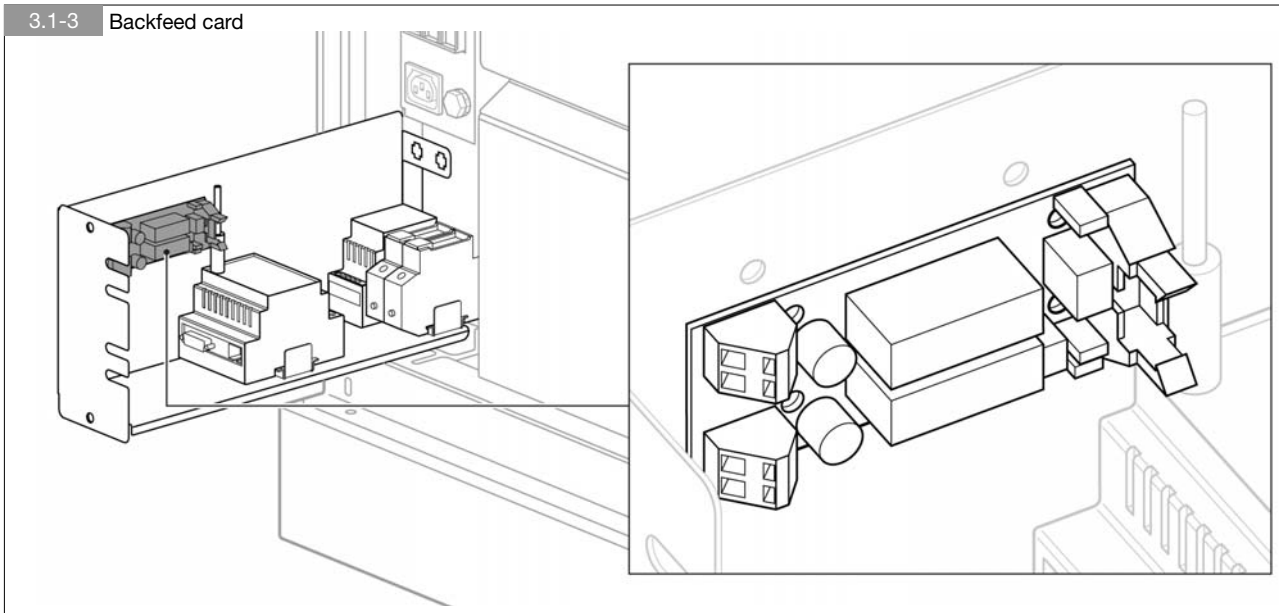

NOTE!
Use a 220-240 V release coil with integrated travel limit contact to pilot the input protection systems. If a trip coil without an integrated end-of-travel contact is used, add an early auxiliary contact must be added (see figure 3.1-2). Electrical data of the contacts: 2 A 250 Vac.

Function	Connector name	V OUT	Internal fuse	Detail
BKF AUX	XB2	230 V RMS	2 A time delay	COM2[1] NO2

1. COM2 is connected to the neutral (NO1 and COM1 are not used)

As an option the unit can be delivered with the integrated internal backfeed switch also for the auxiliary backup mains power supply line (AUX MAINS SUPPLY). Refer to figure 4-3.

The backfeed protection for the input mains supply (MAINS SUPPLY) is incorporated inside the UPS modules as standard.

3.2. CABLE POSITIONING

WARNING!
The cables must be installed on trays according to the following diagrams. The trays must be positioned near the UPS.

WARNING!
All metal and suspended ducts or those in raised flooring MUST be connected to earth and to the various cabinets

WARNING!
Power cables and control cables MUST NEVER be installed in the same duct.

WARNING!
Risk of electromagnetic interference between battery cables and output cables.

3.2-1 Correct installation

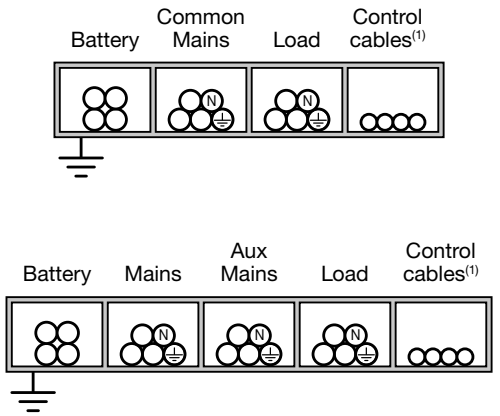

3.2-2 Acceptable installation

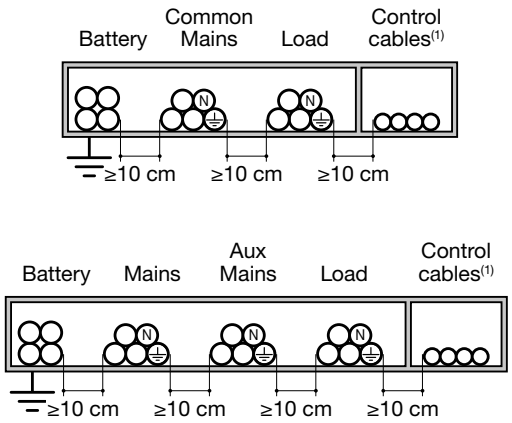

1. Control cables: connections between the cabinets and each unit, alert signals, remote mimic panel, connection to the BMS (Building Management System), emergency stop, connection to generator.

4. OVERVIEW

4-1

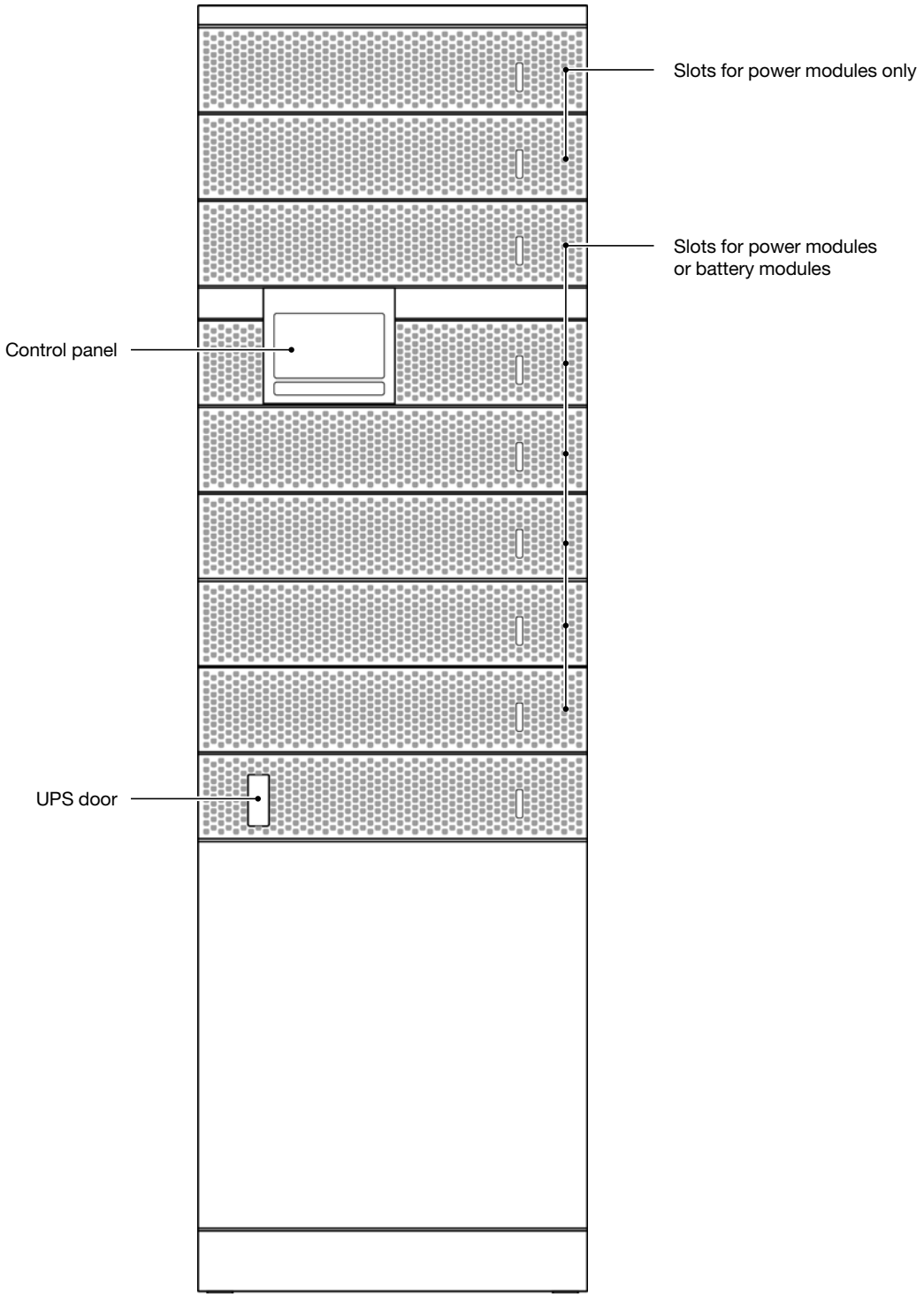

NOTE!
MODULYS GP is available in three different configurations:
- System with manual bypass and input, aux mains, output switches;
- System with manual bypass and input, aux mains, output switches and backfeed;
- System with manual bypass and output switch;

4-2 System with manual bypass and input, aux mains, output switches

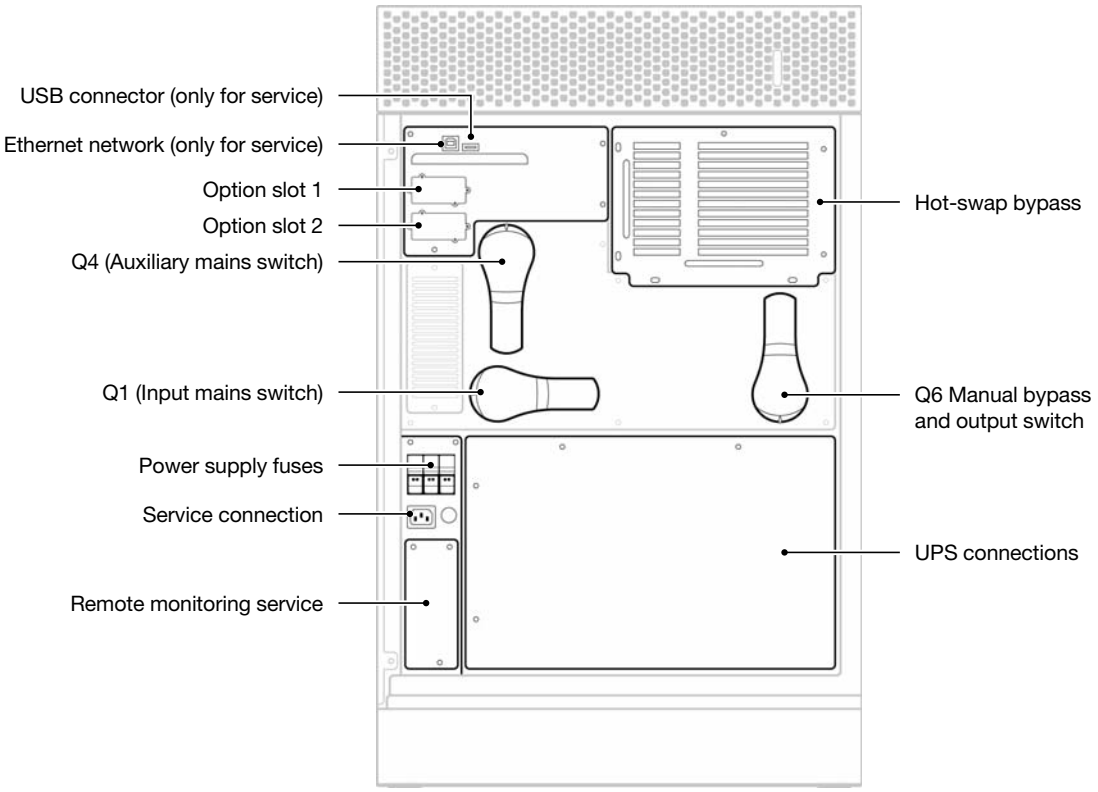

Wiring diagram

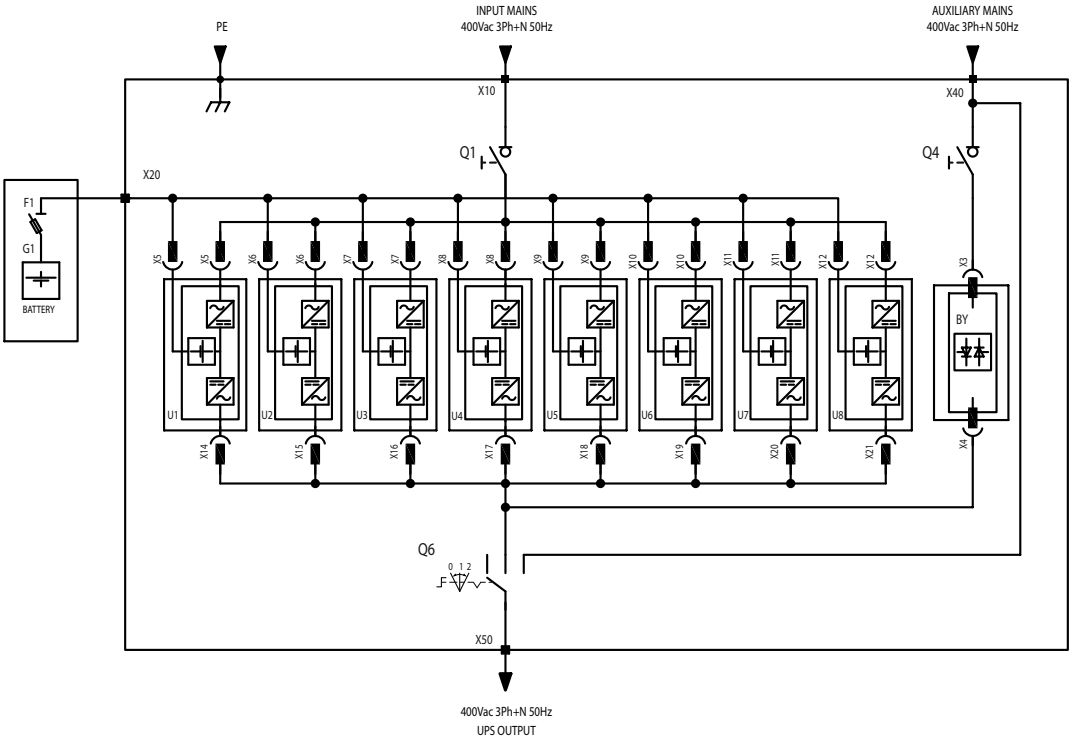

socomec Innovative Power Solutions

4-3 System with manual bypass and input, aux mains, output switches and backfeed

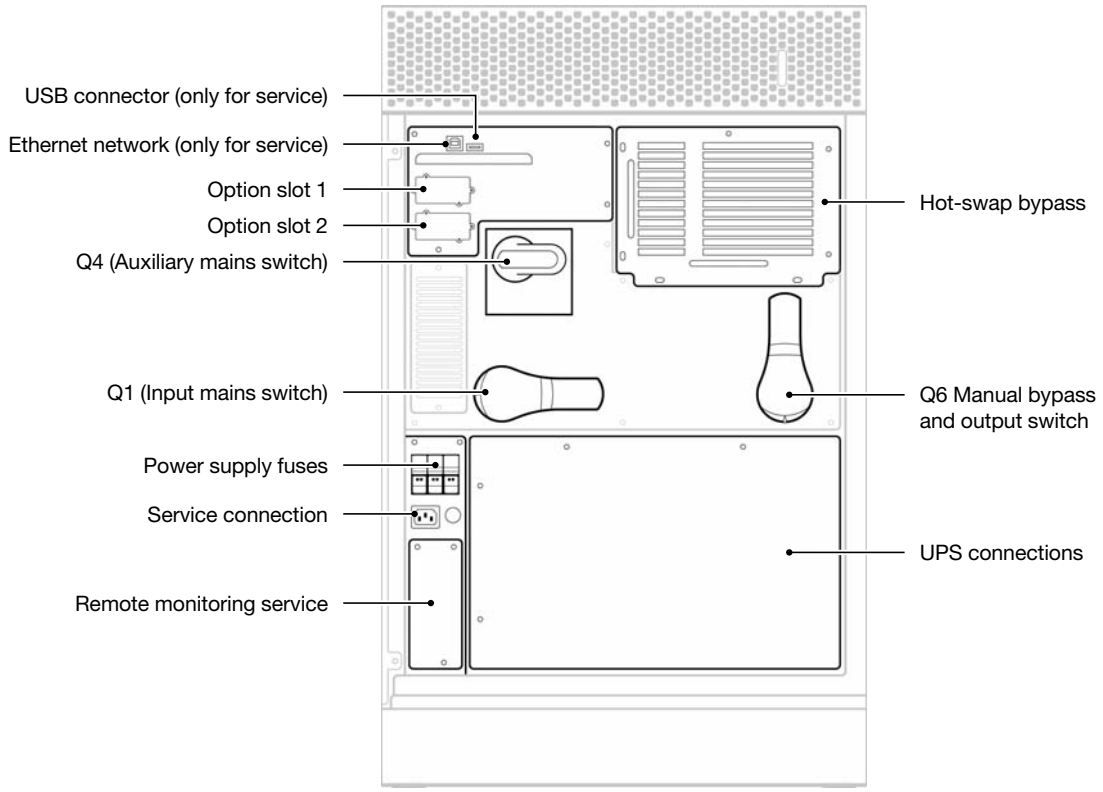

Wiring diagram

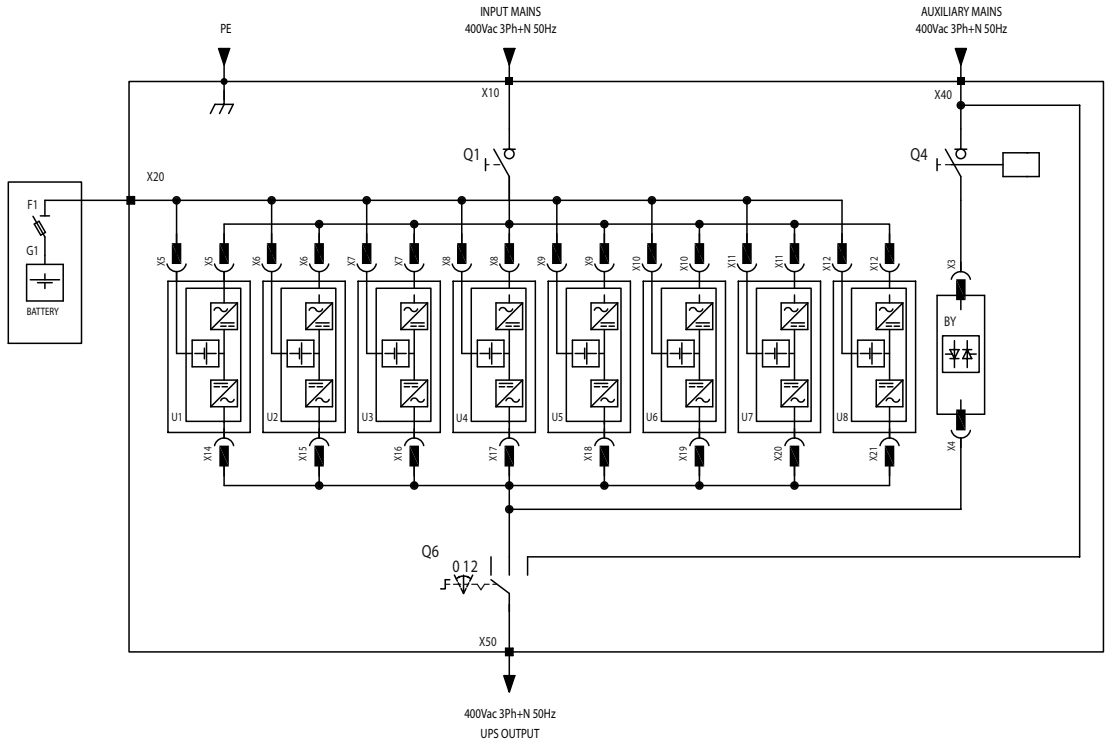

WARNING!
The basic version of the cabinet is provided with the maintenance bypass switch only. Input mains, auxiliary mains and output disconnection equipment should be installed in a cabinet external to the plant following all applicable national and international standards.

WARNING!
The basic version of the cabinet has no output switch and therefore the shutdown function (UPS Power OFF) is performed with a red button located in the area of the cabinet shown in the picture below.

4-4 System with manual bypass and output switch

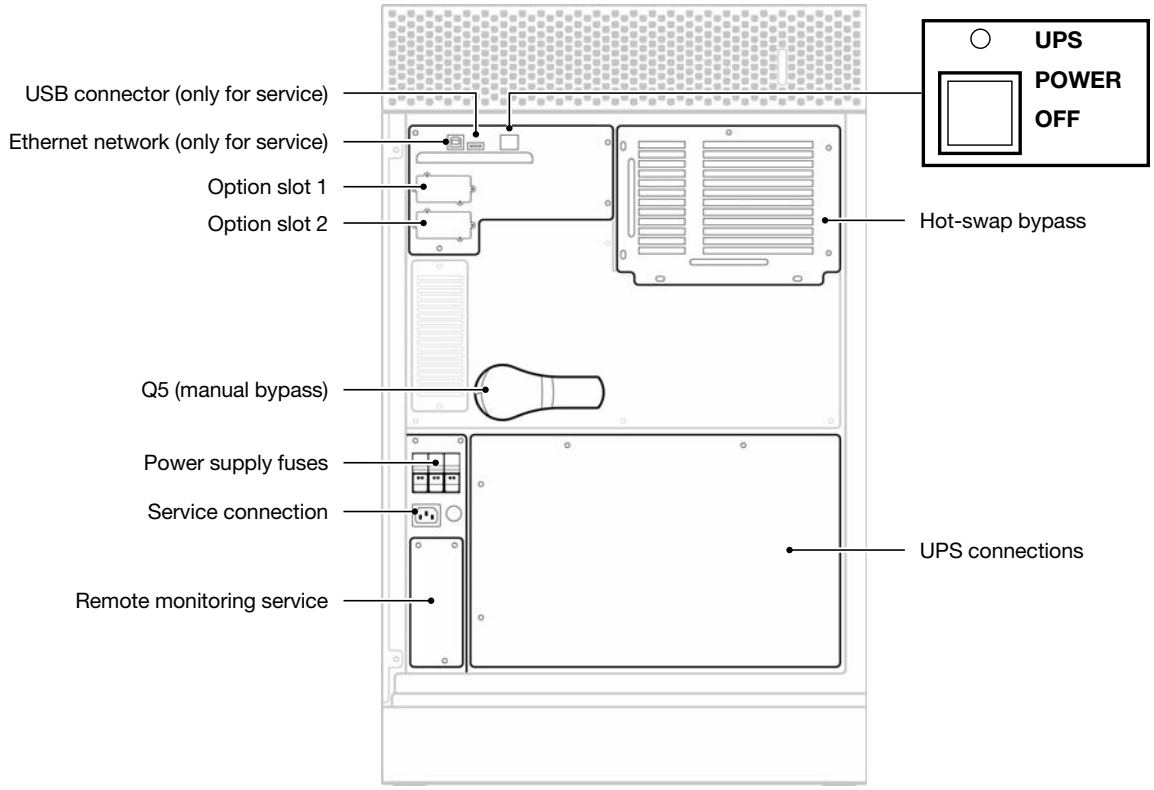

Wiring diagram

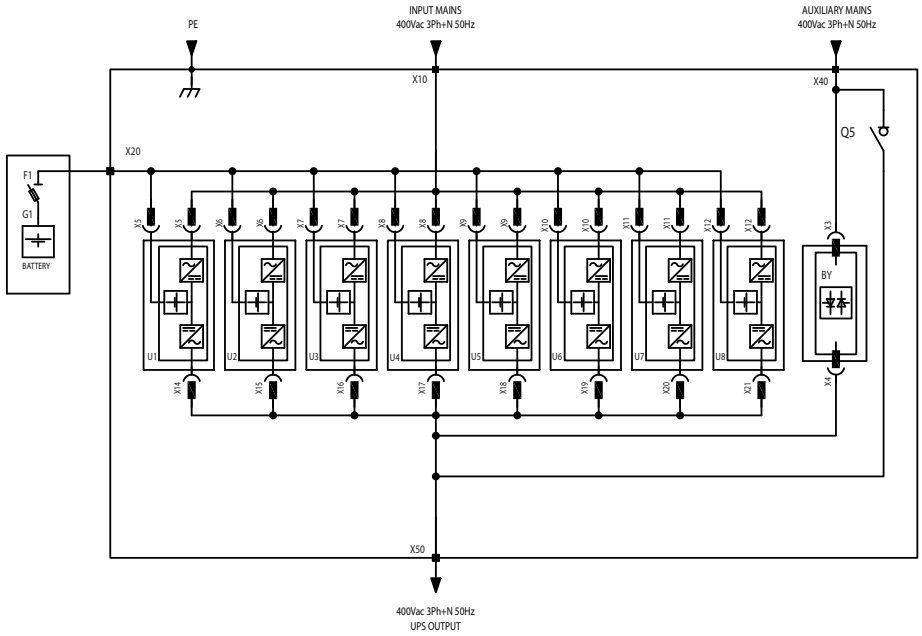

socomec
Innovative Power Solutions

5. CONNECTIONS

NOTE!
Before carrying out any operations on the unit read the Safety standards chapter carefully.

WARNING!
Battery power terminals can be supplied by:
- external battery cabinet;
- internal battery modules;
- UPS power modules.

Before working on this circuit ensure that:
- all the external battery cabinet switches are in OFF position;
- all the internal battery modules are disconnected;
- the UPS is in maintenance bypass mode (refer to 'Operating modes' chapter)
- all UPS power modules are disconnected;

Check the presence of voltage before operating.

WARNING!
The unit is supplied with the bars already installed. In the case of separate mains connection remove the bars.

FLOOR MOUNTING ANTI-INTRUSION INSTALLATION KIT

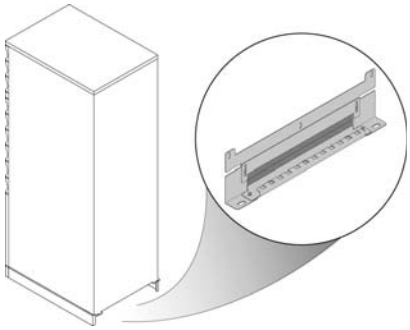

NOTE!
The cables coming from the rear of the unit must pass through the appropriate gap.
This operation must be carried out:
- before wiring operations;
- before securing the kit to the unit and the floor.

5-1

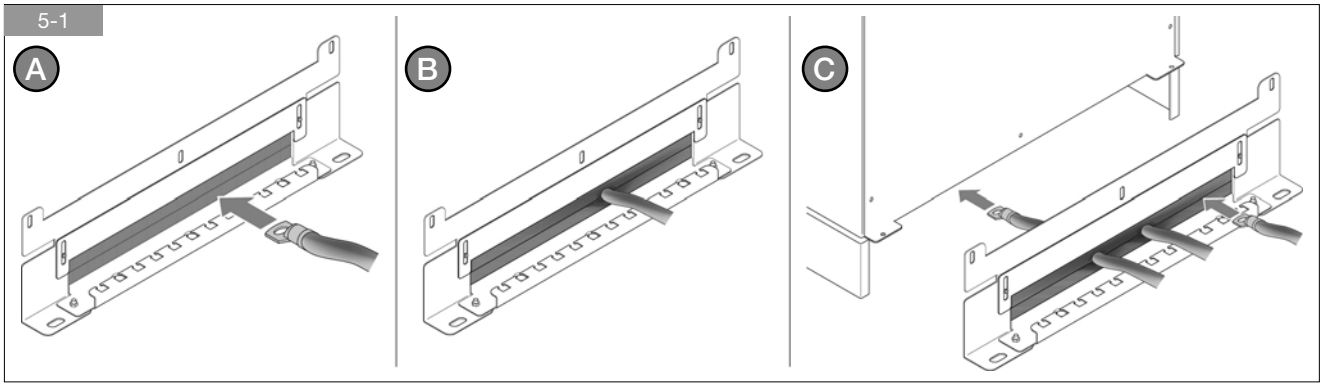

5-2

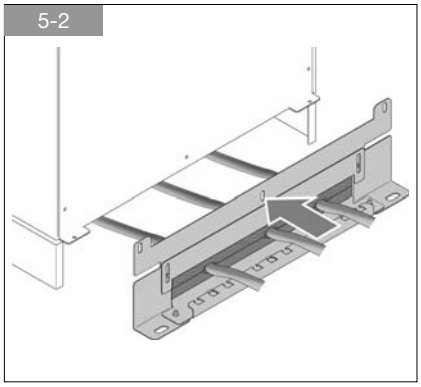

5-3

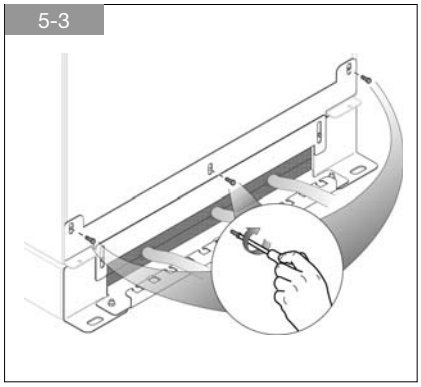

5-4

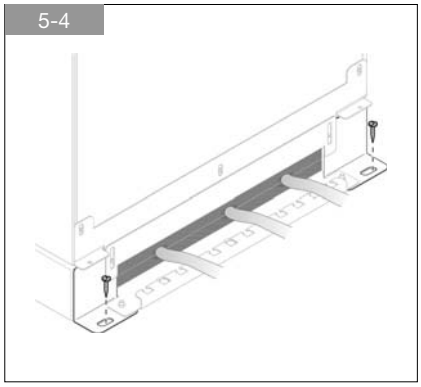

ENGLISH

5.1. MAINS AND AUXILIARY MAINS CONNECTED SEPARATELY

5.1-1

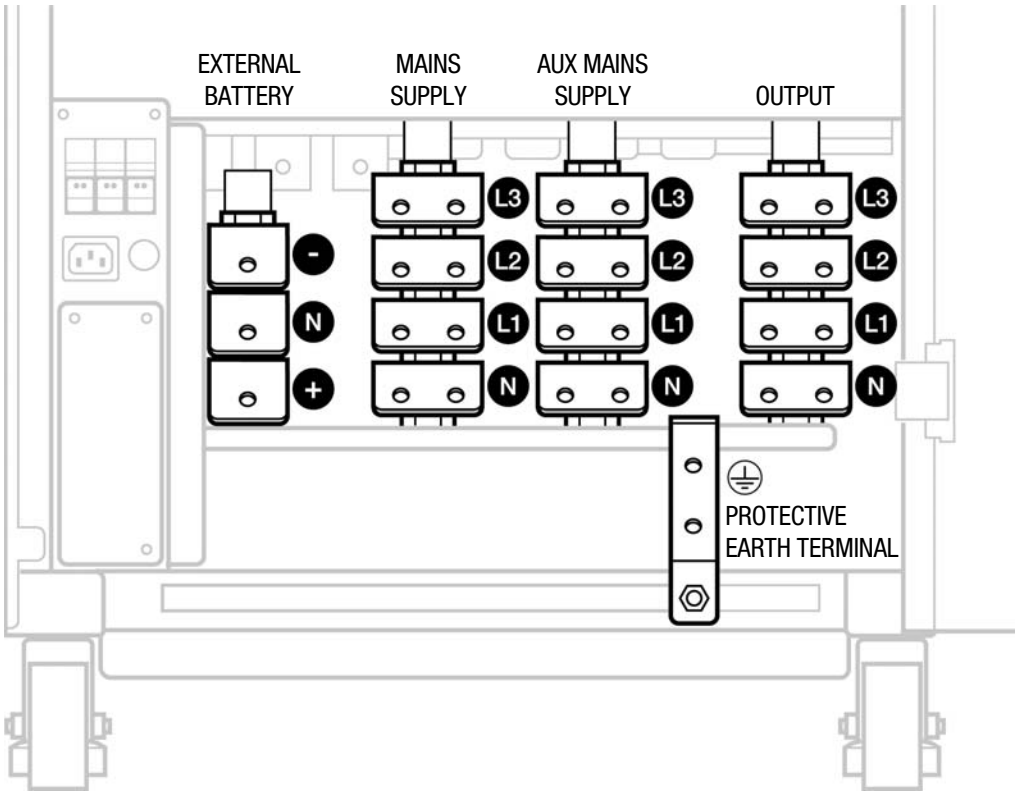

5.2. MAINS AND AUXILIARY MAINS CONNECTED TOGETHER

5.2-1

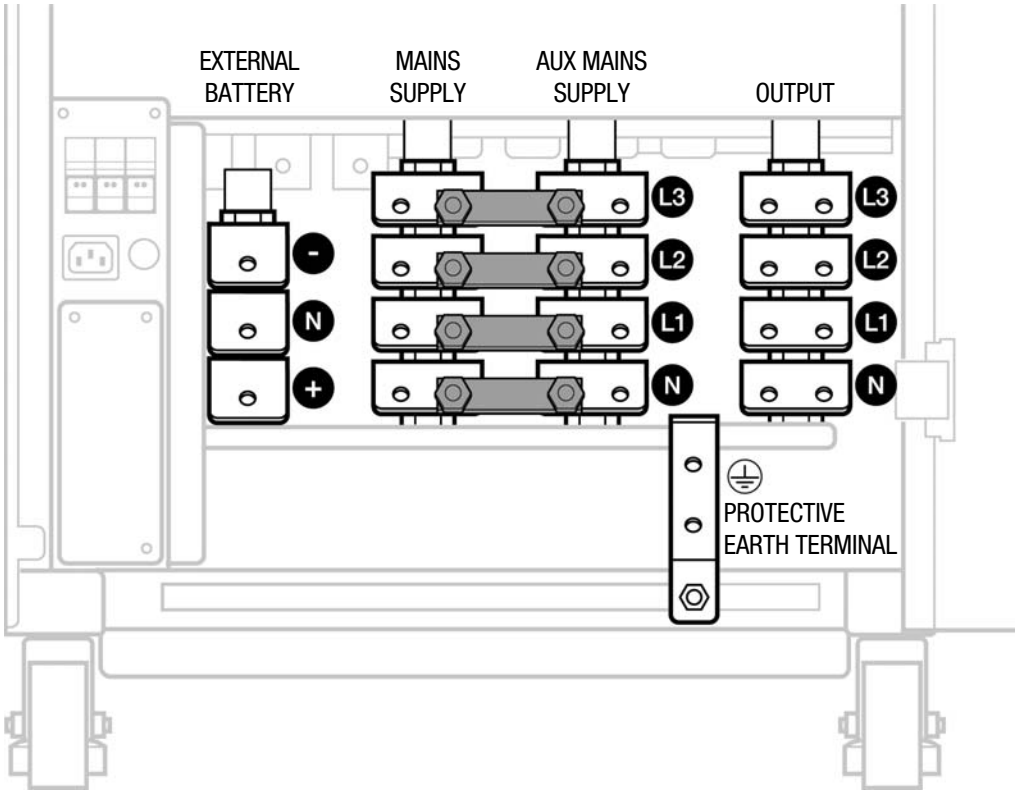

5.3. EXTERNAL BATTERY CONNECTION

NOTE!
For further information refer to the battery cabinet manual.

- Remove the plastic terminal block protection.
- Connect the protective earth (PE) cable.
- Connect the cables between the UPS terminals and the battery cabinet terminals.

WARNING!
Strictly observe:
- the polarity of each individual string (refer to the figure below);
- the cable cross section (refer to 'Electrical requirements' chapter).

WARNING!
Cabling errors with inversion of battery polarity may cause permanent damage to the equipment.

Reassemble the plastic terminal block protection.

5.3-1

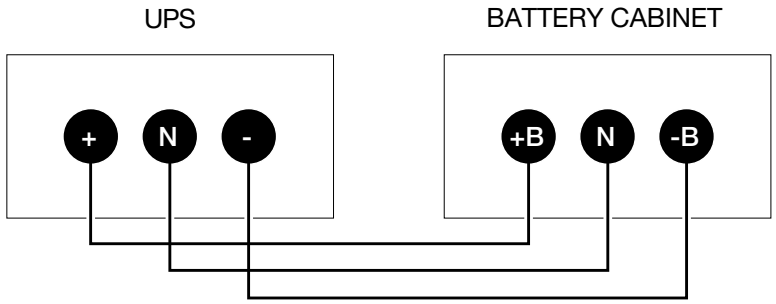

NOTE!
When battery cabinets not supplied by Socomec are used the installer is responsible for:
- checking electrical compatibility;
- checking the presence of appropriate protective devices (fuses and switches that ensure the cables are protected from the UPS to the battery cabinet).

Once the UPS is switched on – before closing the battery switches – check the battery parameters on the control panel menu. For further information, refer to 'Menu' chapter.

NOTE!
Not all battery/capacity combinations are available.

5.4. OTHER CONNECTIONS

NOTE!
Before carrying out any operations on the unit read the Safety standards chapter carefully.

WARNING! RISK OF TIPPING OVER!
Before carrying out any operations, ensure the UPS is secured at the feet.

WARNING! RISK OF TIPPING OVER!
The four feet must be secured evenly to ensure the unit is stable.

5.4-1

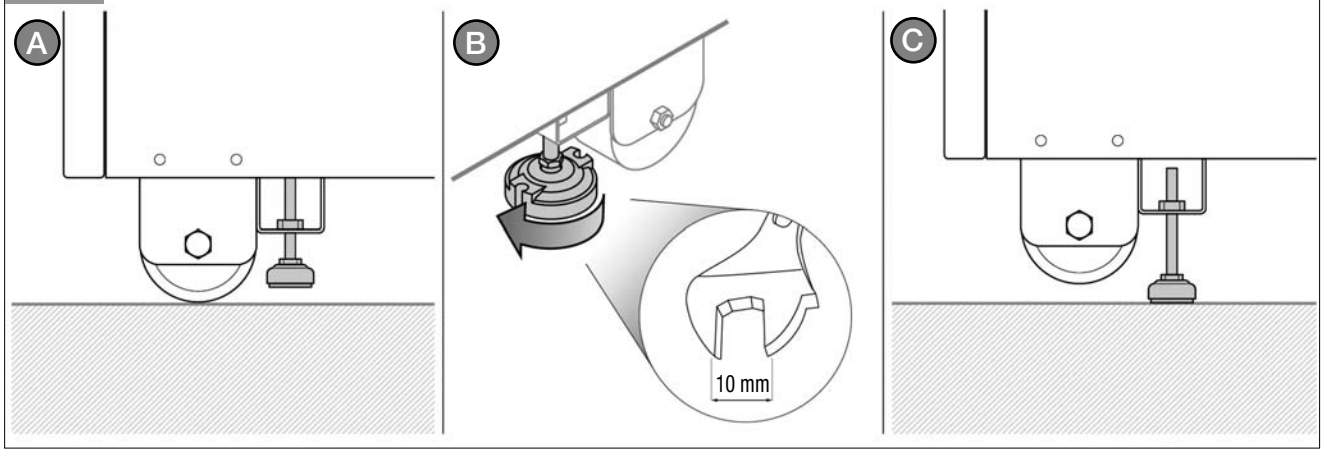

WARNING! RISK OF TIPPING OVER!
The modules must be inserted from the bottom upwards and removed from the top downwards to ensure the unit remains stable.

WARNING!
Before removing any module, ensure that the remaining power modules can support the load.

5.4-2 Power module electrical diagram

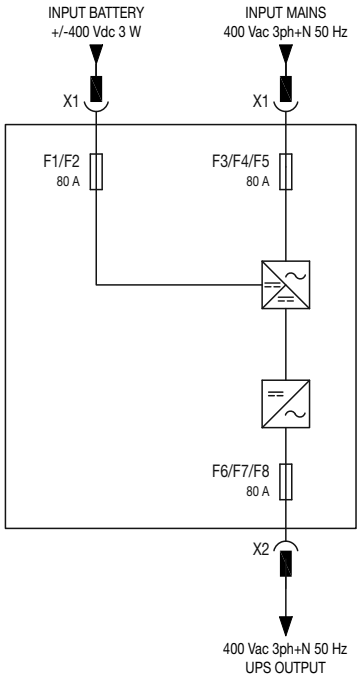

5.4-3 Bypass module electrical diagram

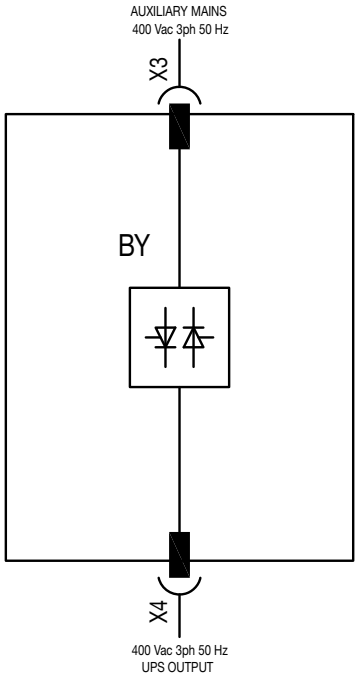

POWER MODULE INSERTION

1

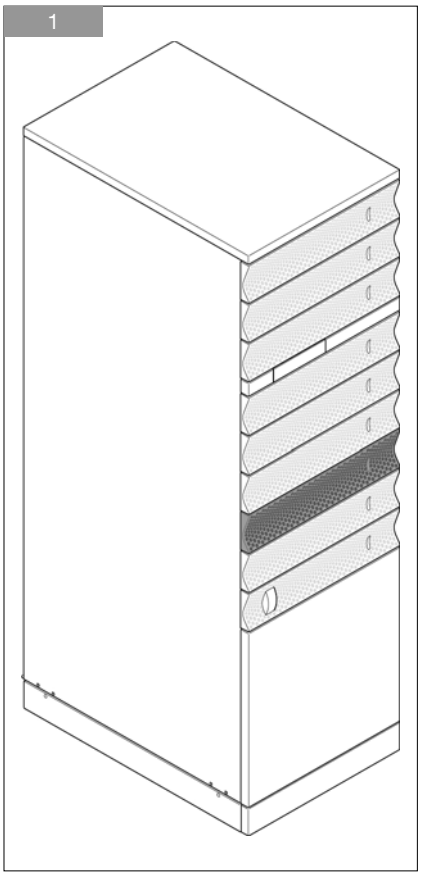

2

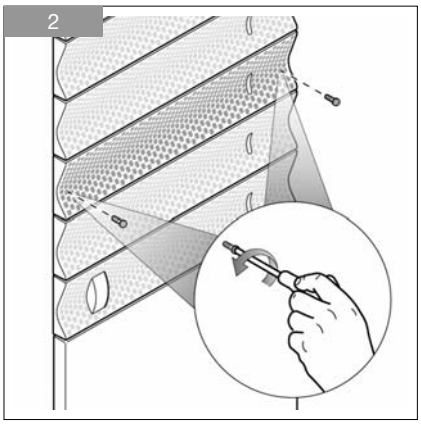

3

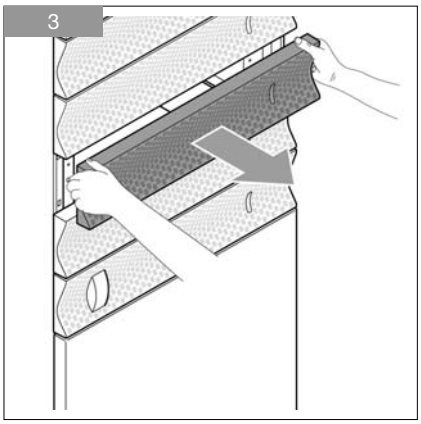

4

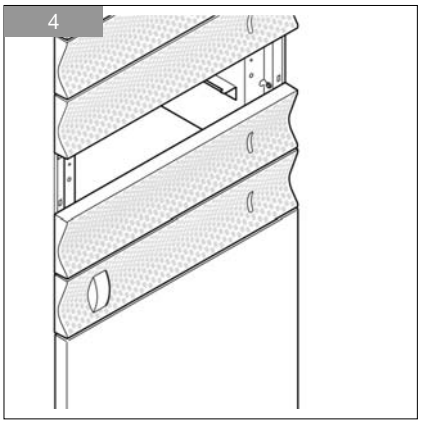

5

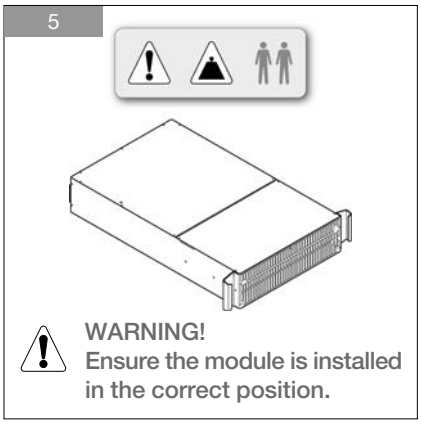

WARNING!
Ensure the module is installed in the correct position.

6

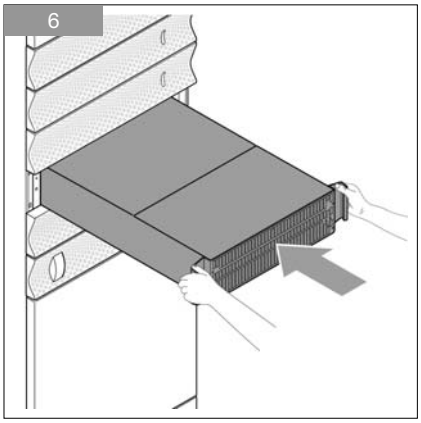

7

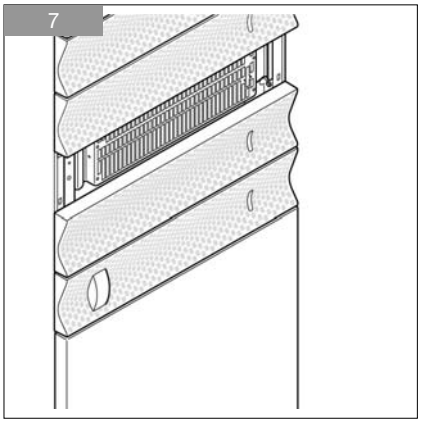

8

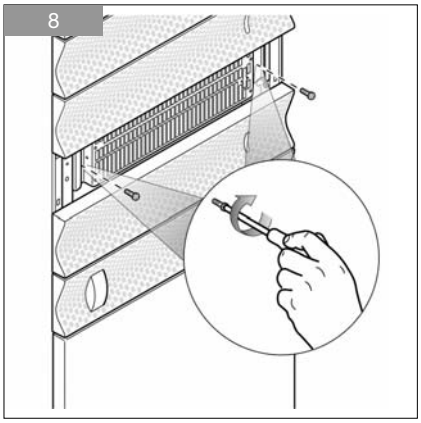

9

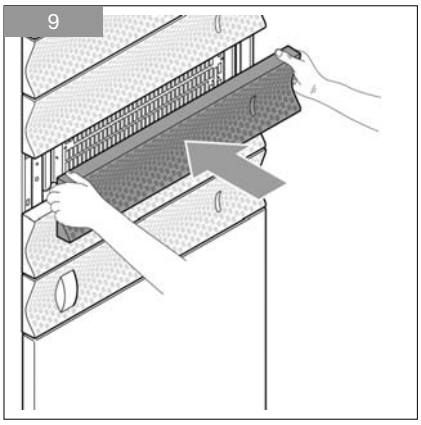

10

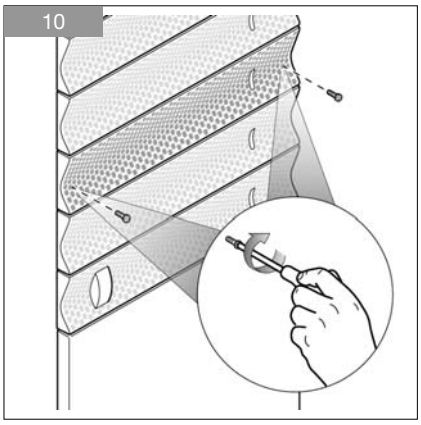

POWER MODULE REMOVAL

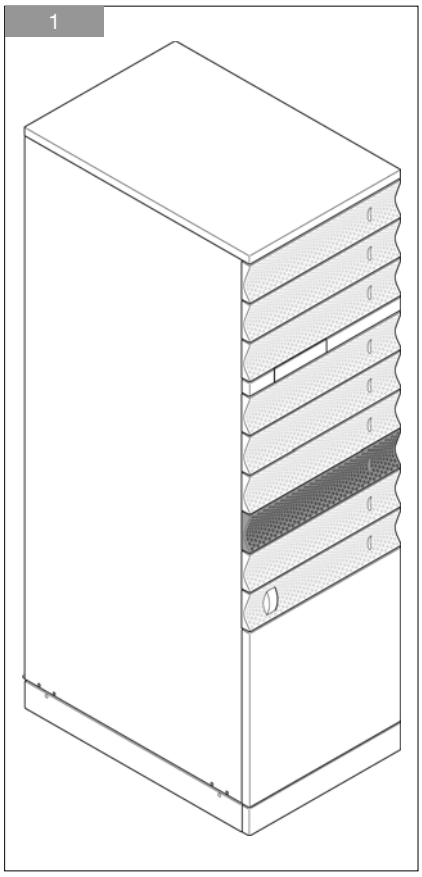

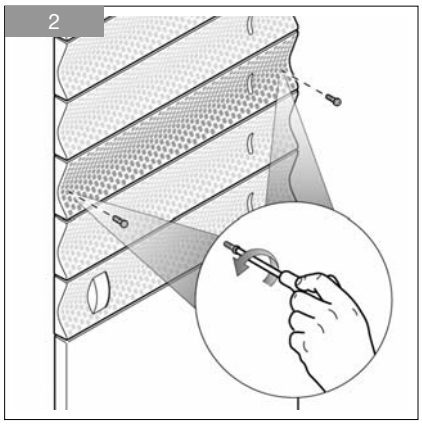

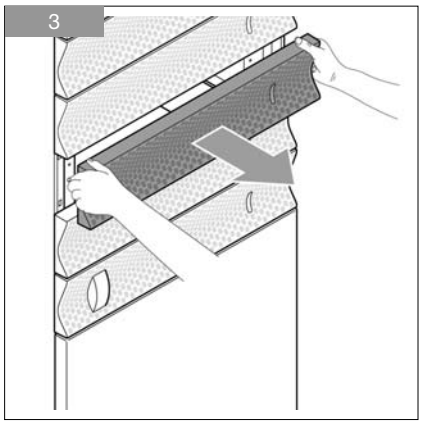

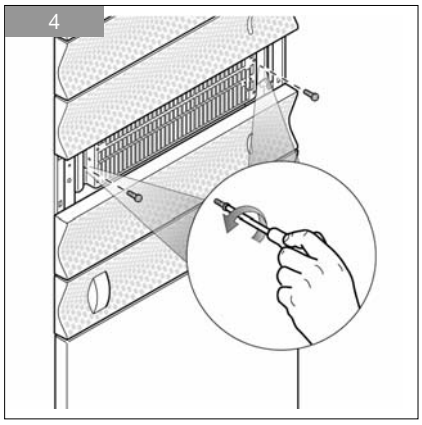

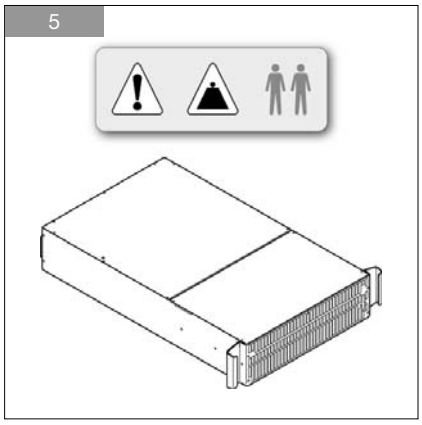

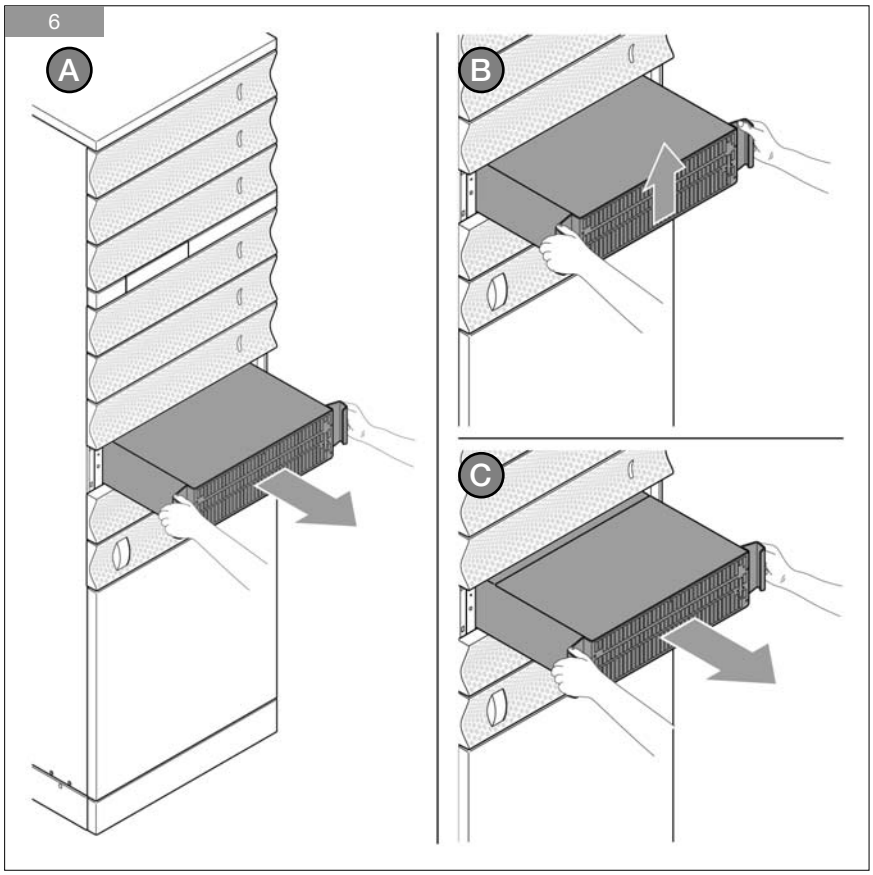

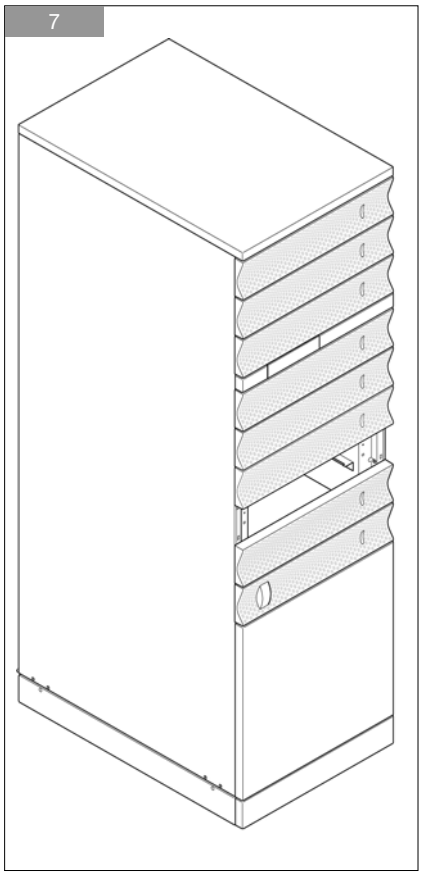

BYPASS MODULE REPLACEMENT

WARNING!
It is only possible to remove the bypass module when the unit is in normal mode or in maintenance bypass mode (refer to 'operating modes' chapter). Before removing the bypass ensure that the unit is not in bypass mode.

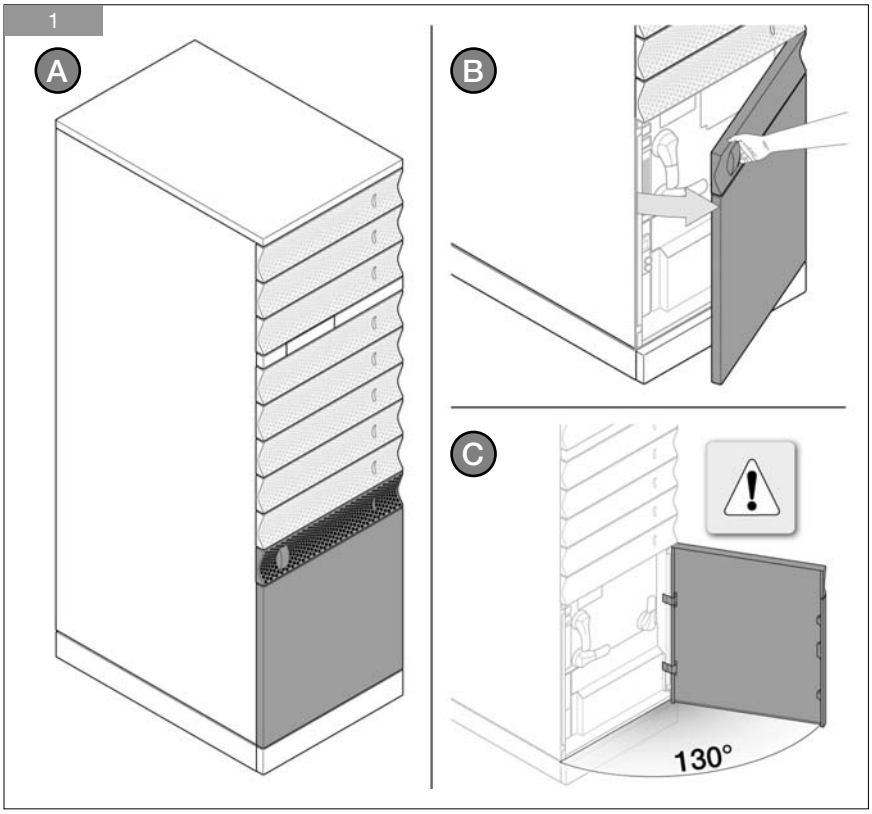

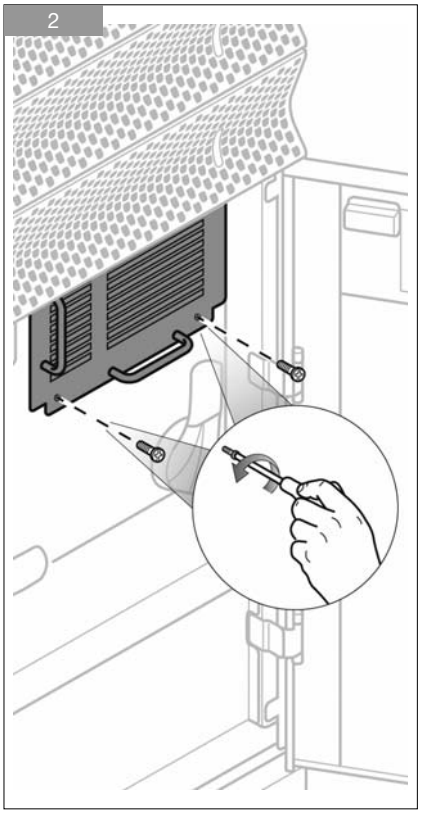

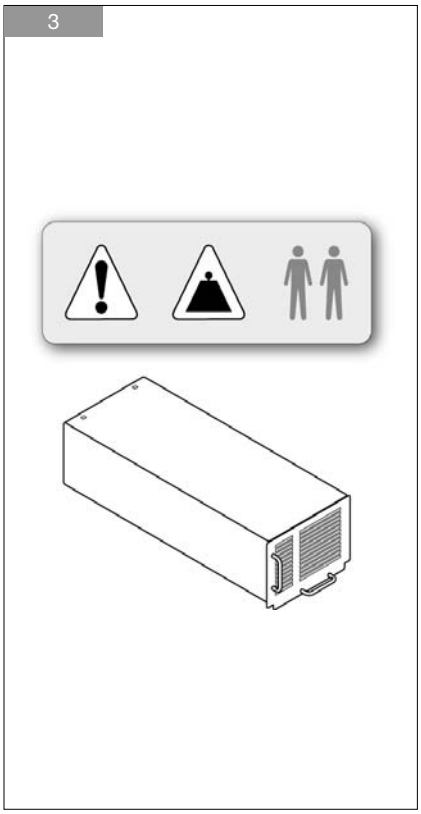

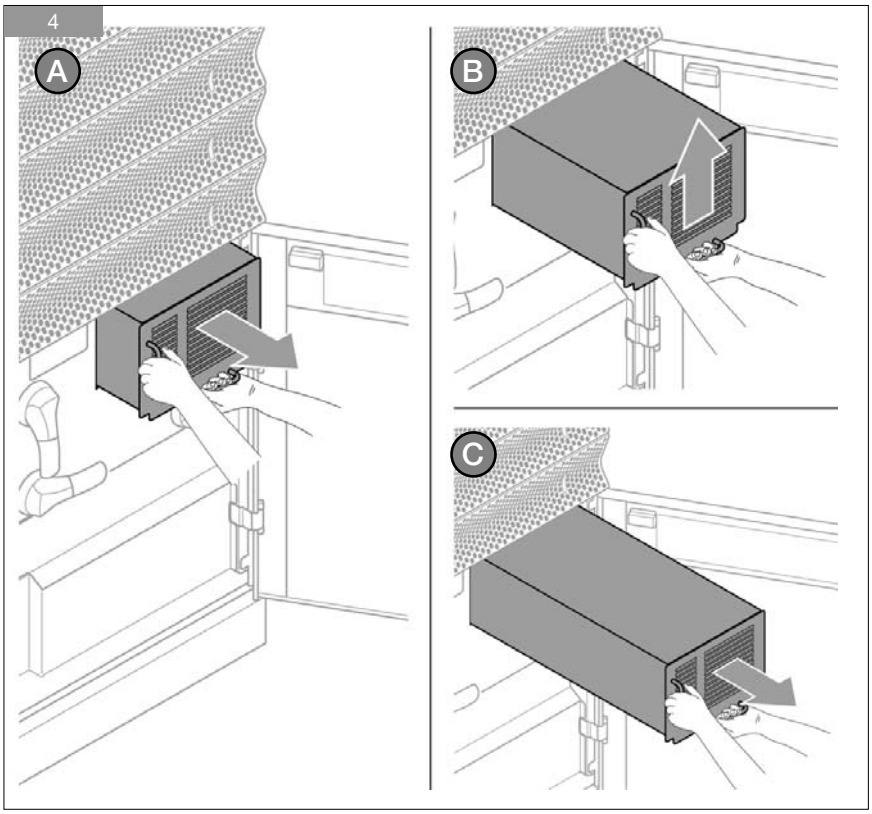

5

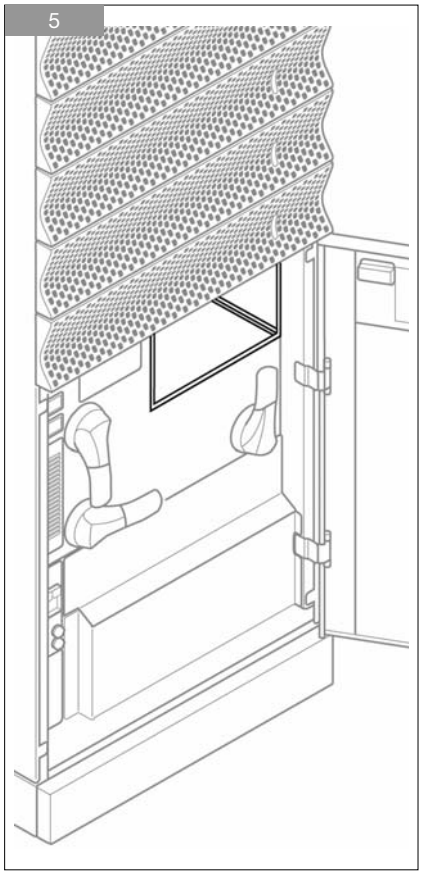

6

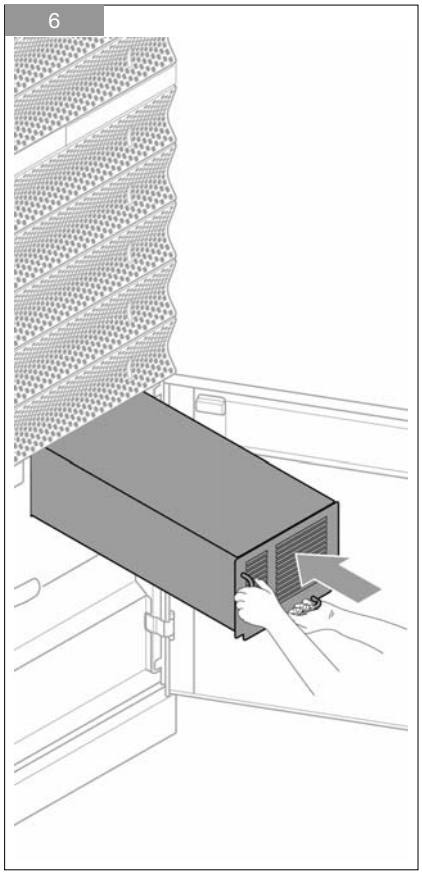

7

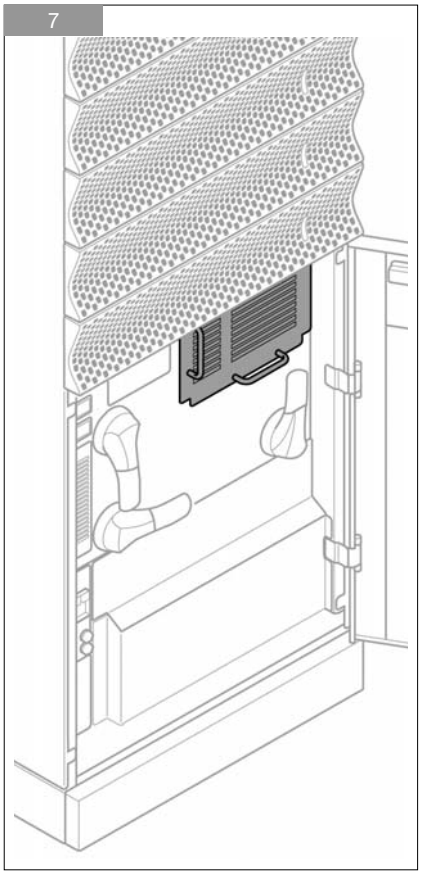

8

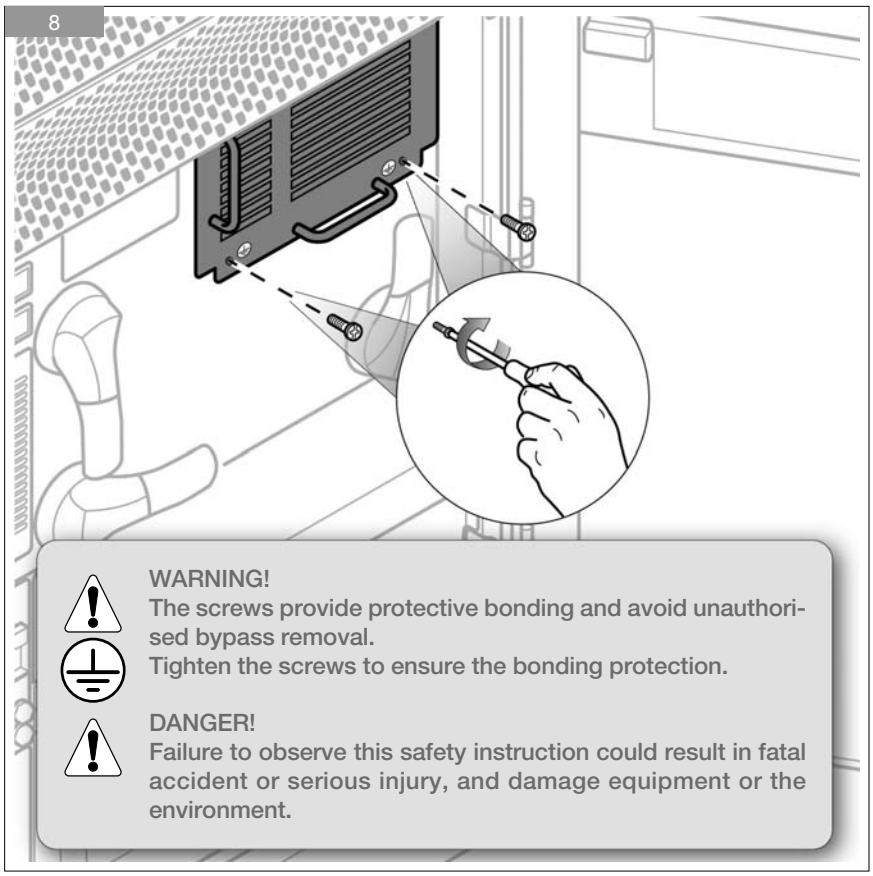

WARNING!
The screws provide protective bonding and avoid unauthorised bypass removal.
Tighten the screws to ensure the bonding protection.

DANGER!
Failure to observe this safety instruction could result in fatal accident or serious injury, and damage equipment or the environment.

9

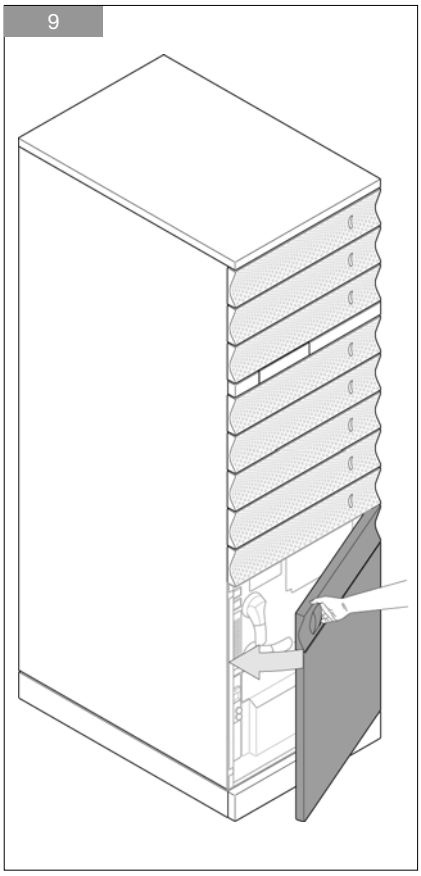

socomec
Innovative Power Solutions

BATTERY MODULE CONNECTION

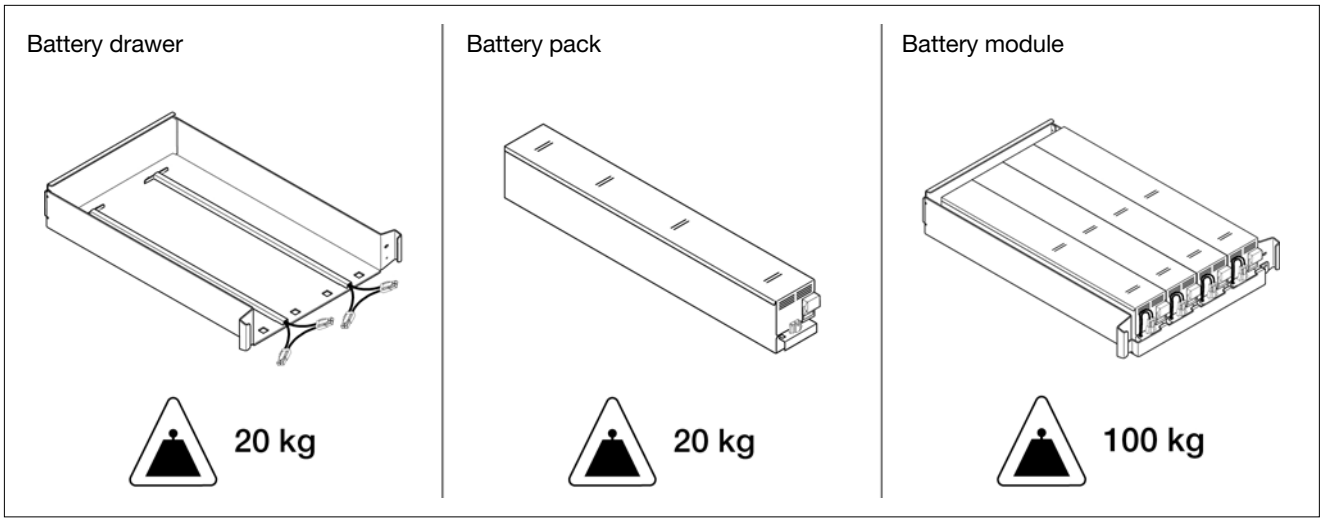

WARNING!
Battery packs have to be moved individually. Never handle the entire battery module or more than one battery pack.

NOTE!
Up to six battery modules can be installed in the unit.

NOTE!
Battery modules must be installed starting with the lower positions below the power modules. This guarantees the stability of the unit.

NOTE!
Follow the instructions below for correct insertion.

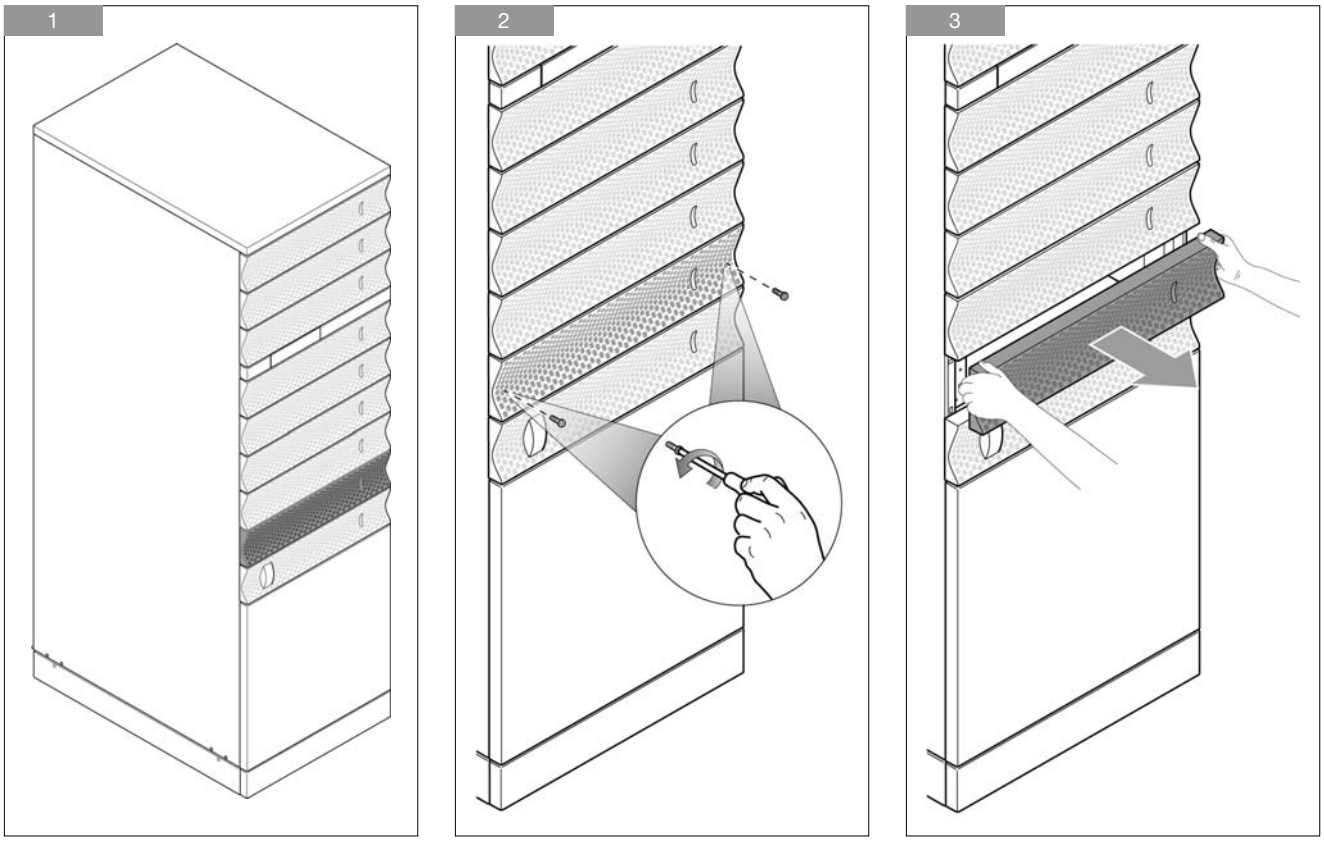

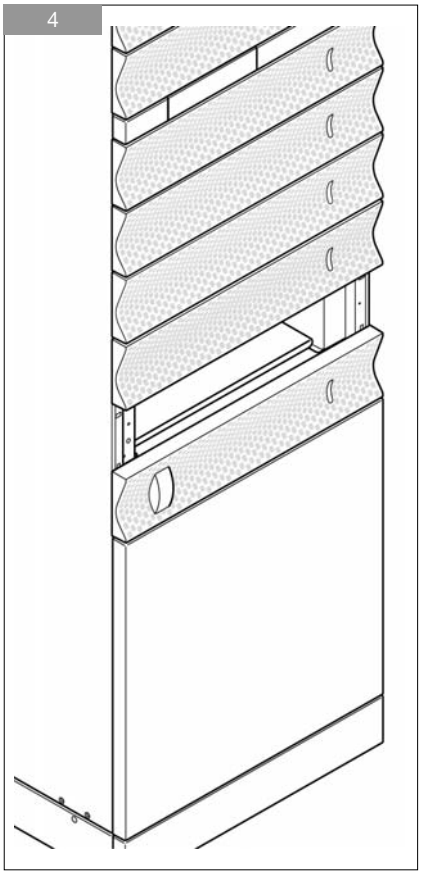

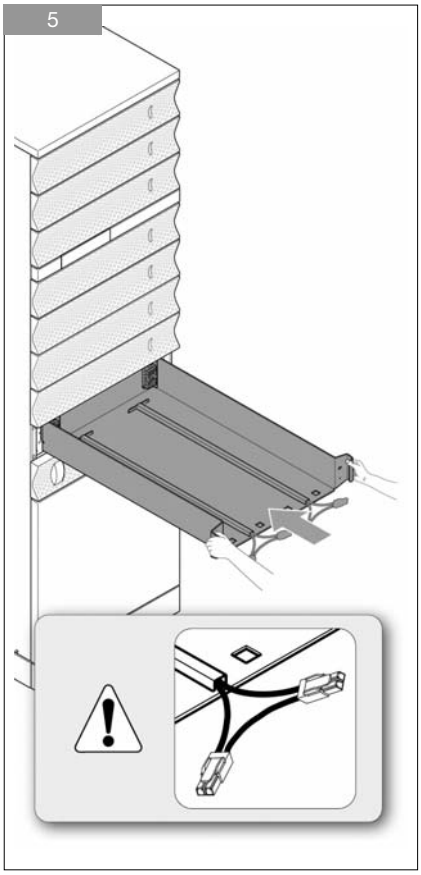

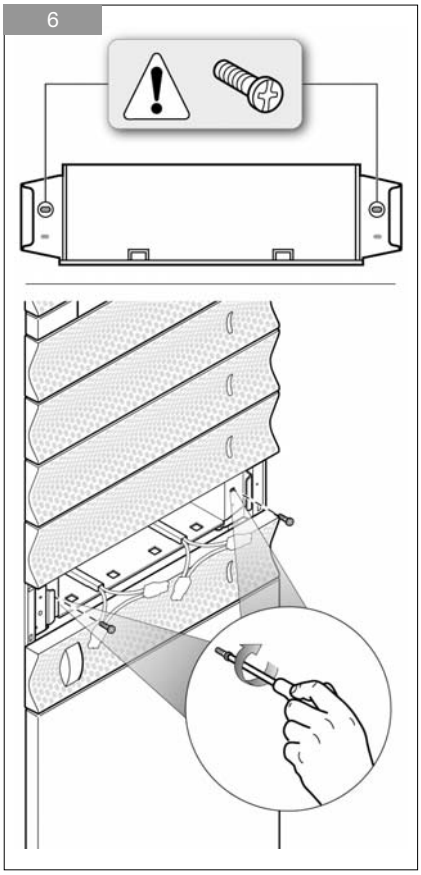

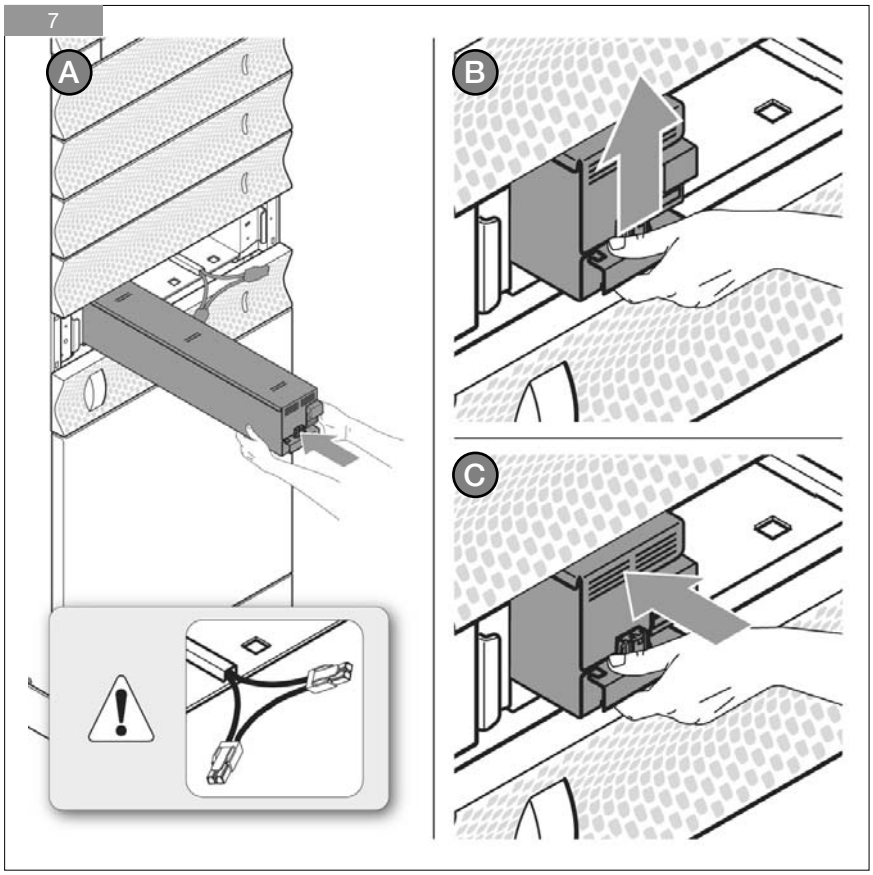

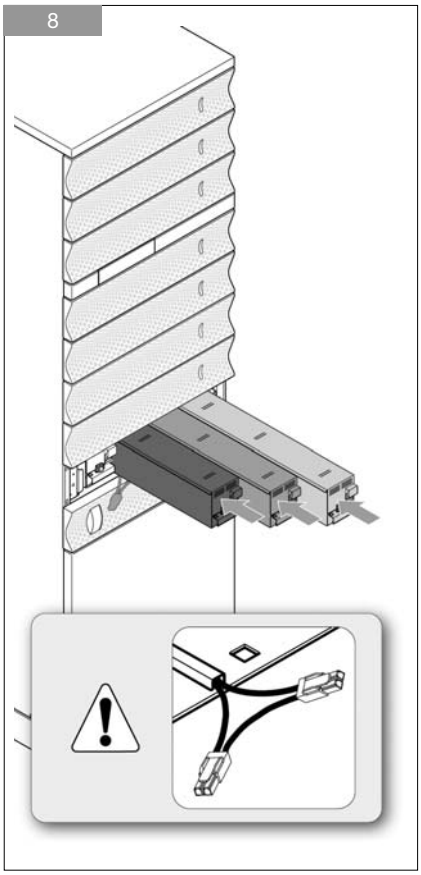

9

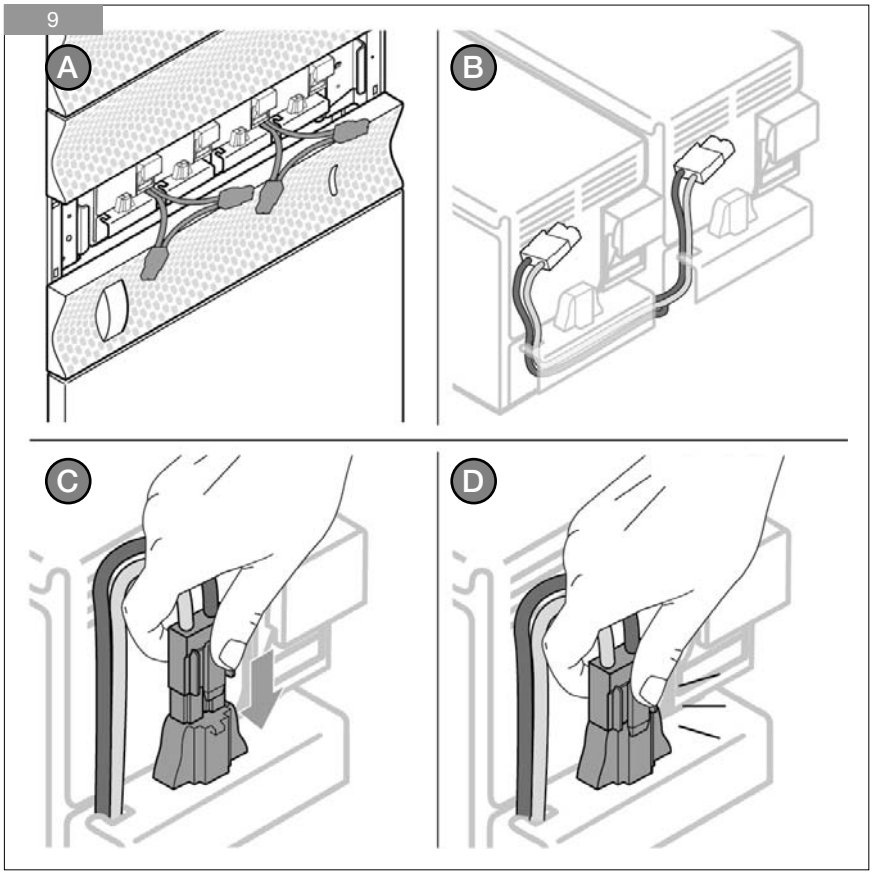

10

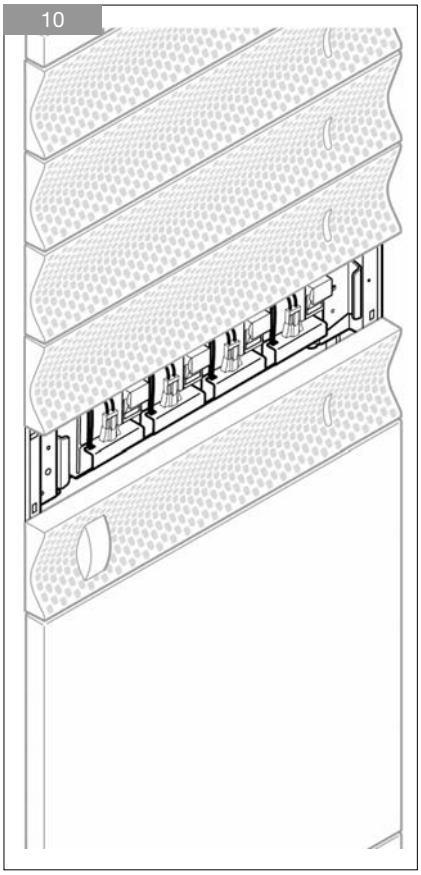

11

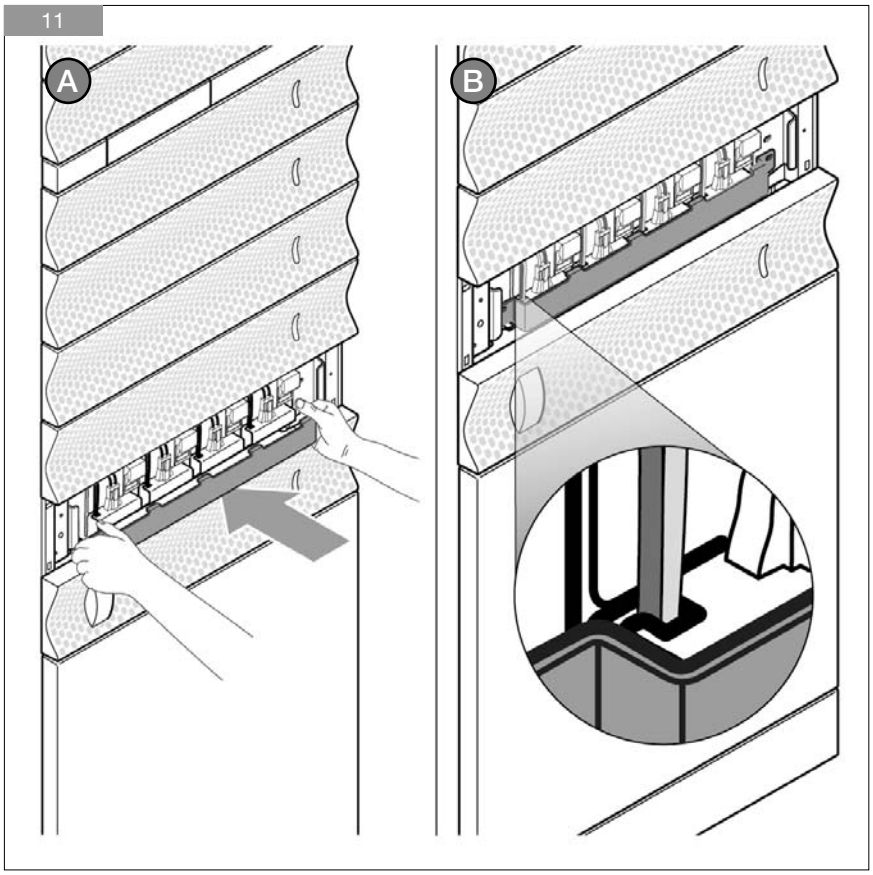

12

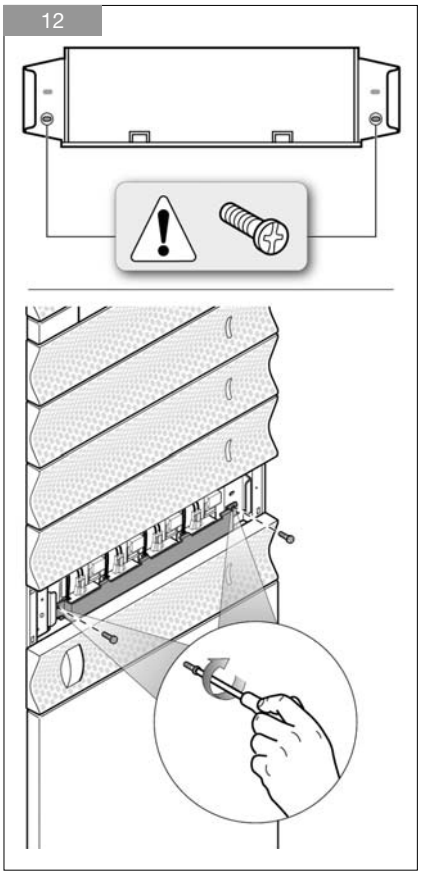

13

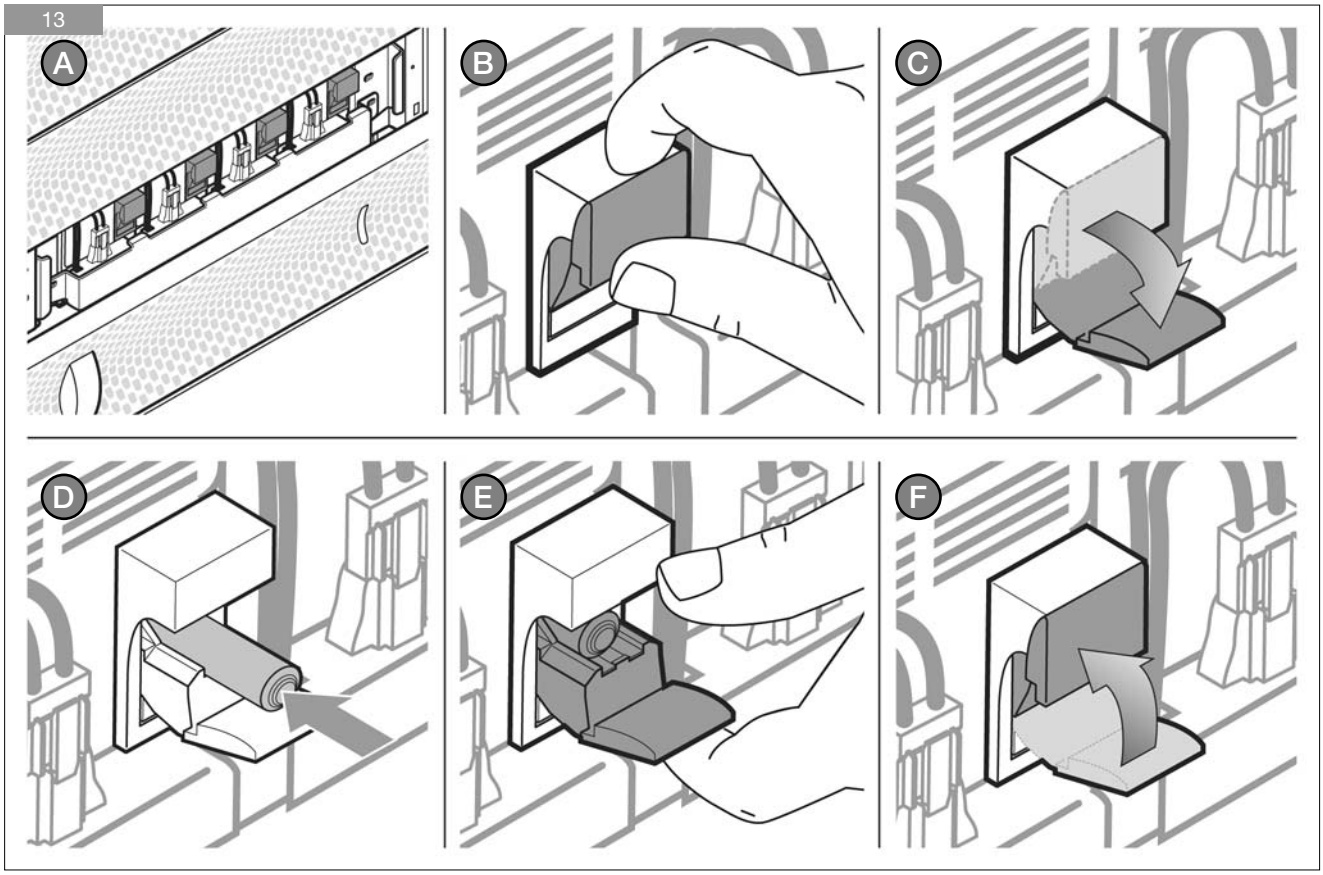

14

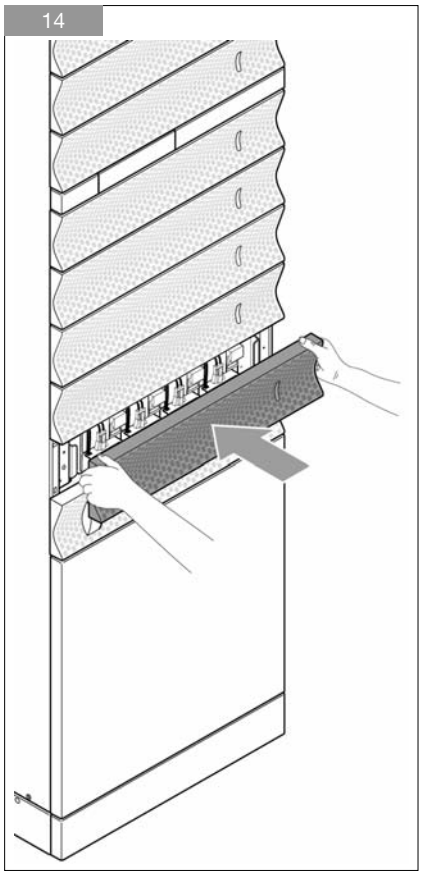

15

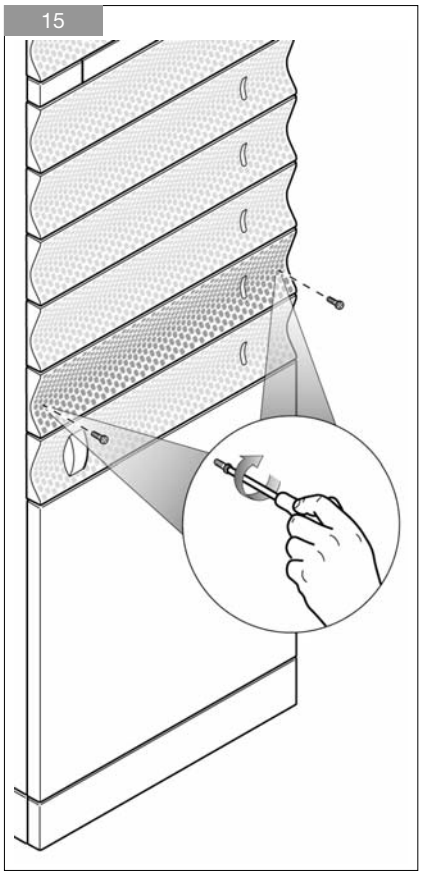

BATTERY MODULE REPLACEMENT

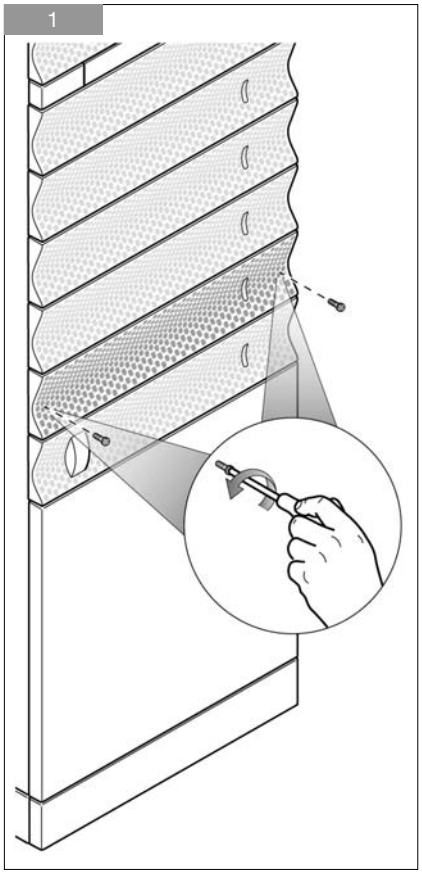

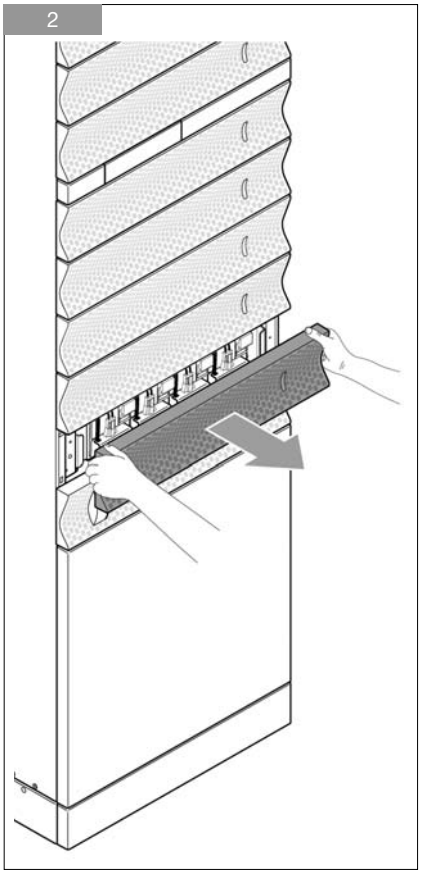

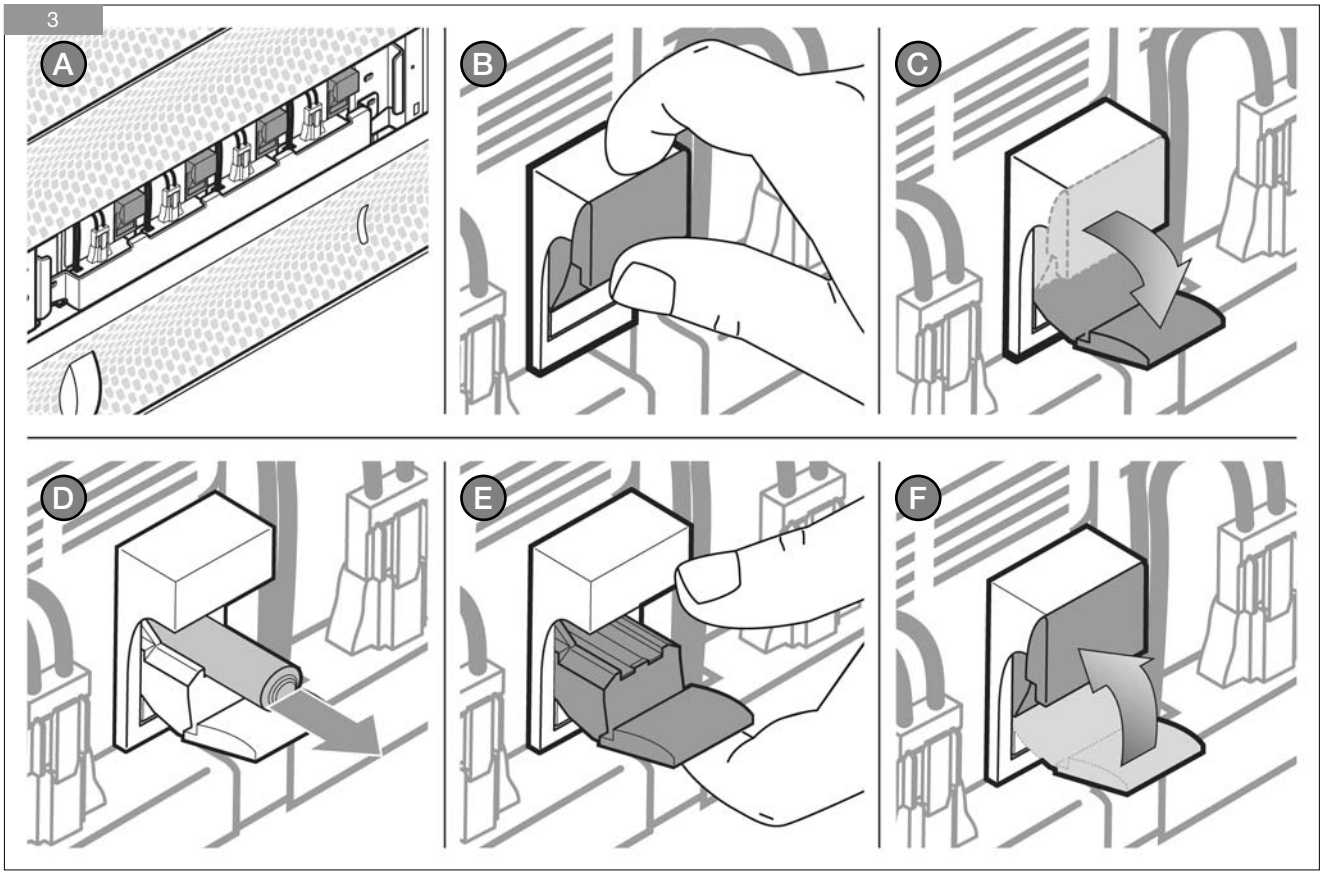

4

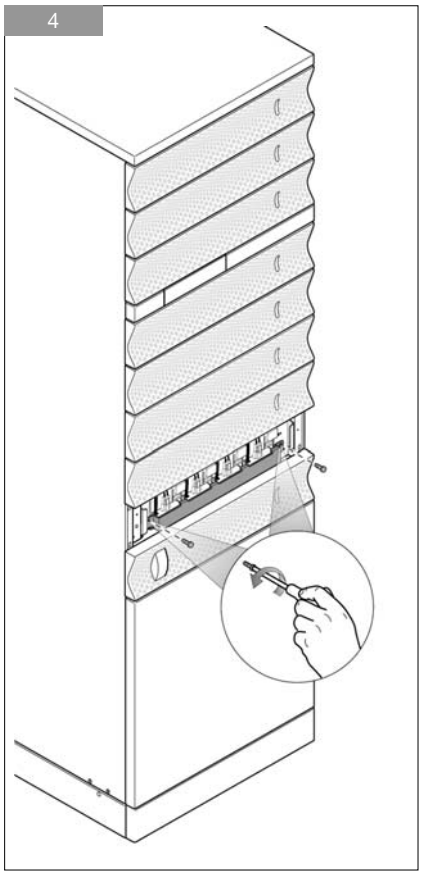

5

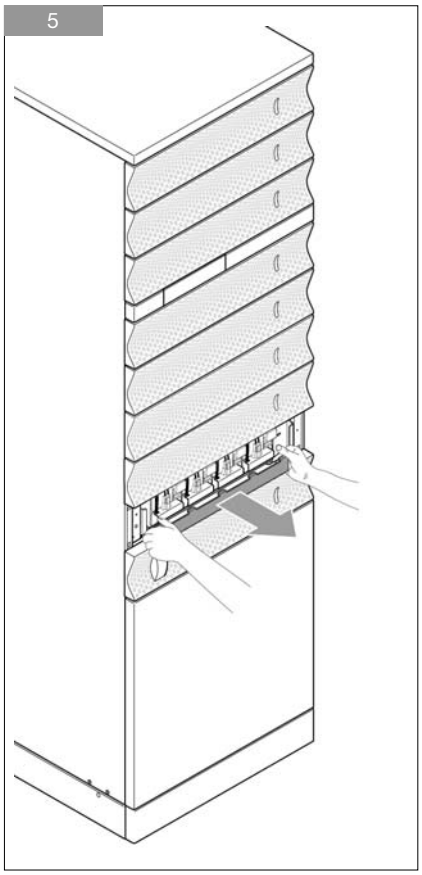

6

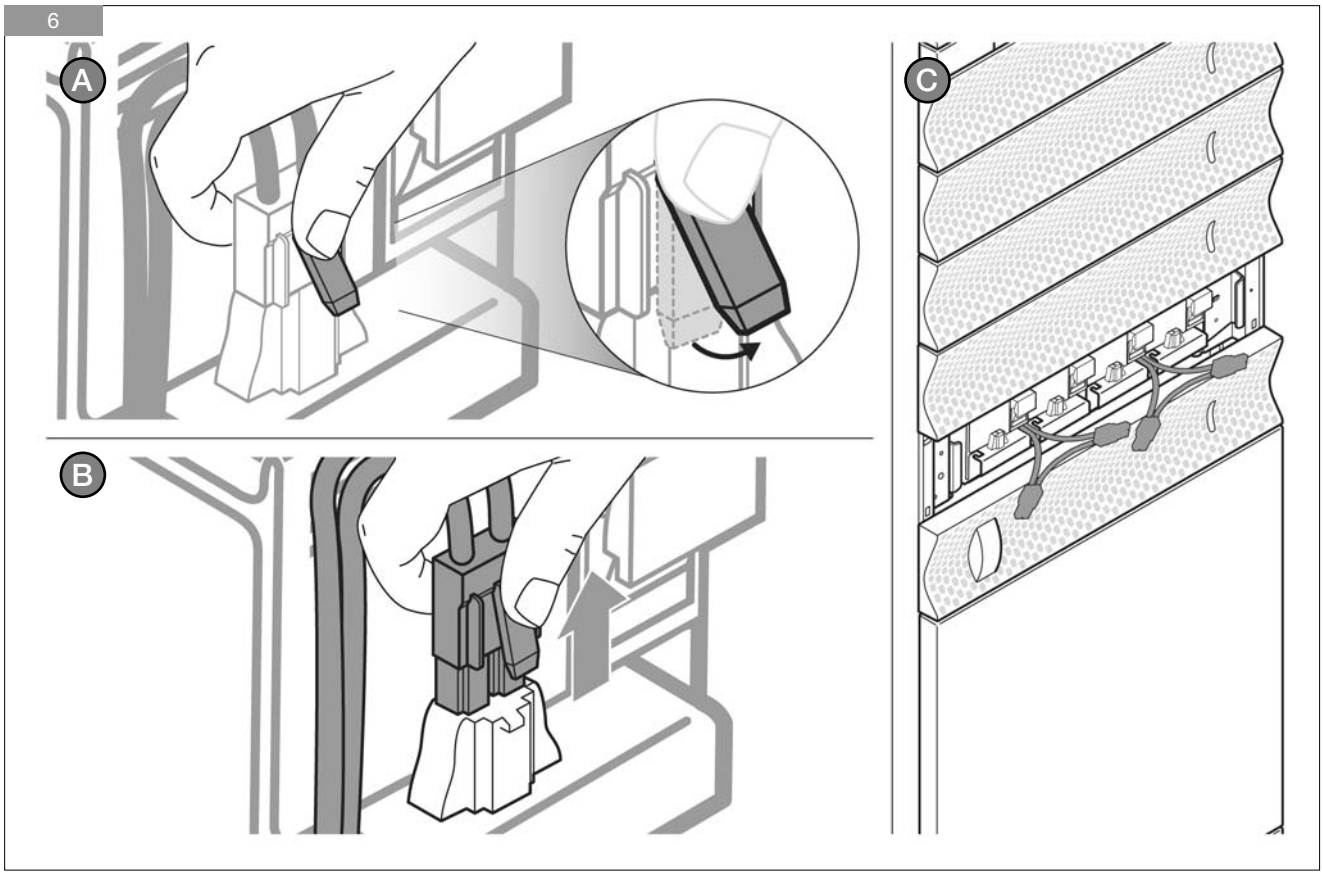

socomec
Innovative Power Solutions

7

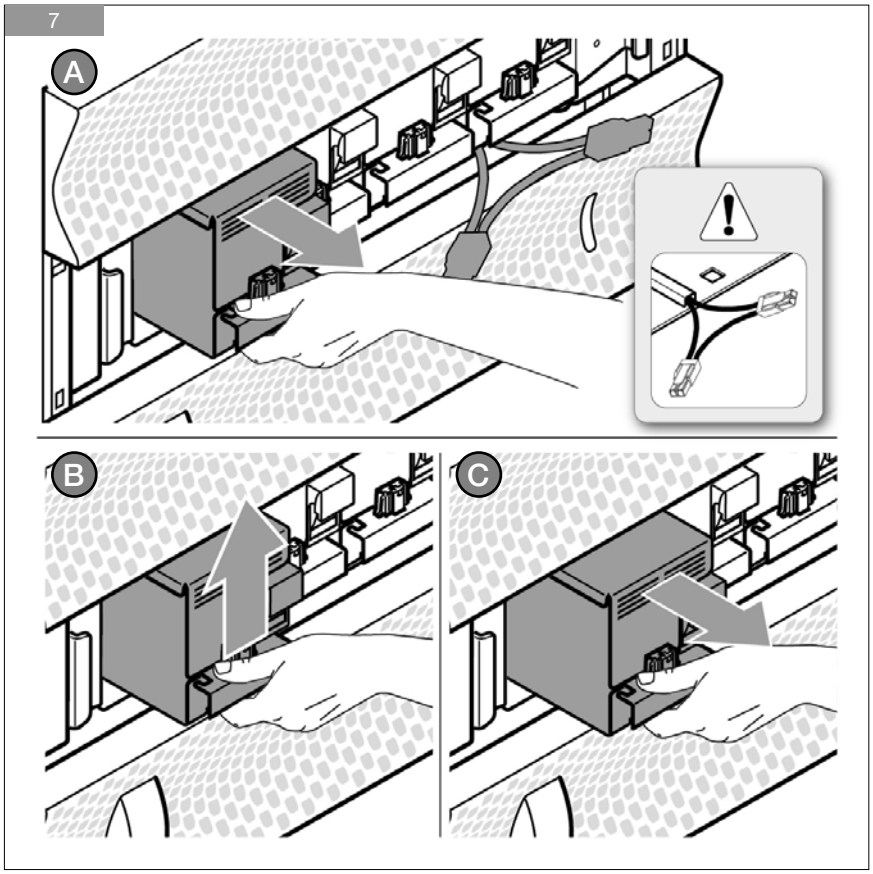

8

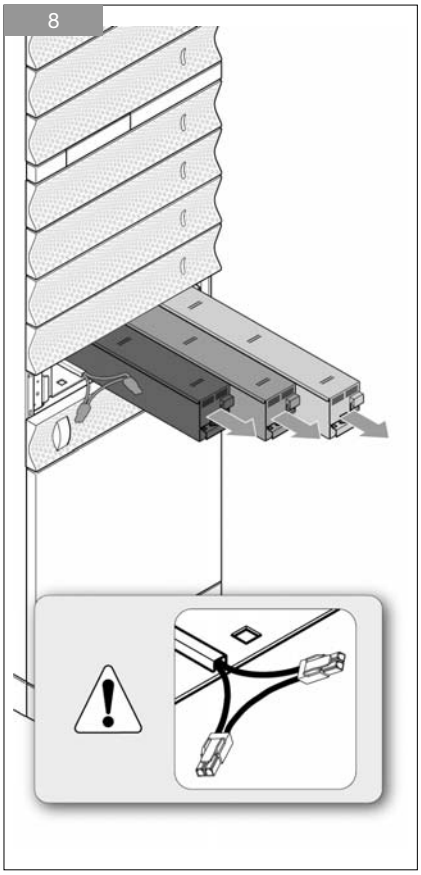

9

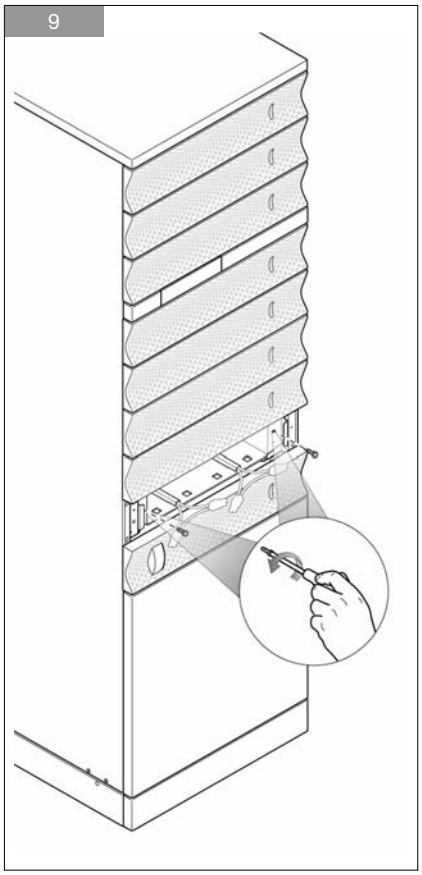

10

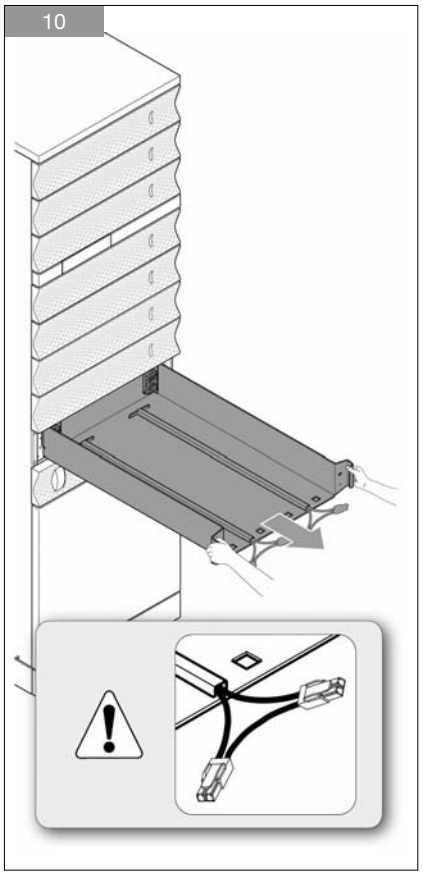

11

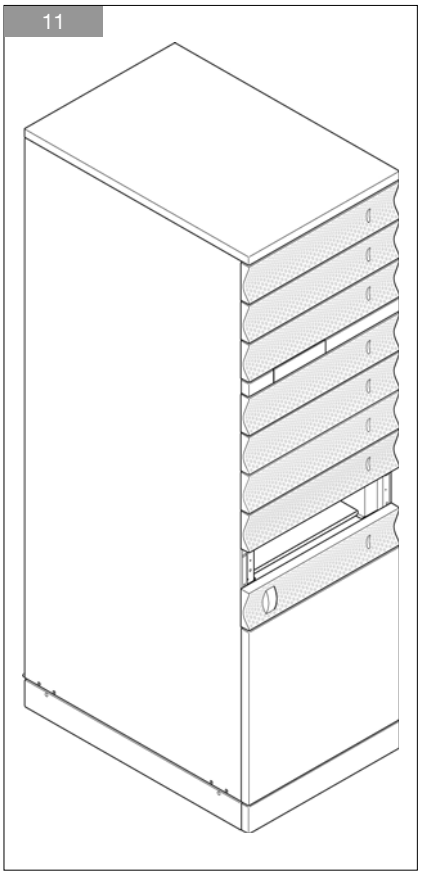

6. CONTROL PANEL

6-1

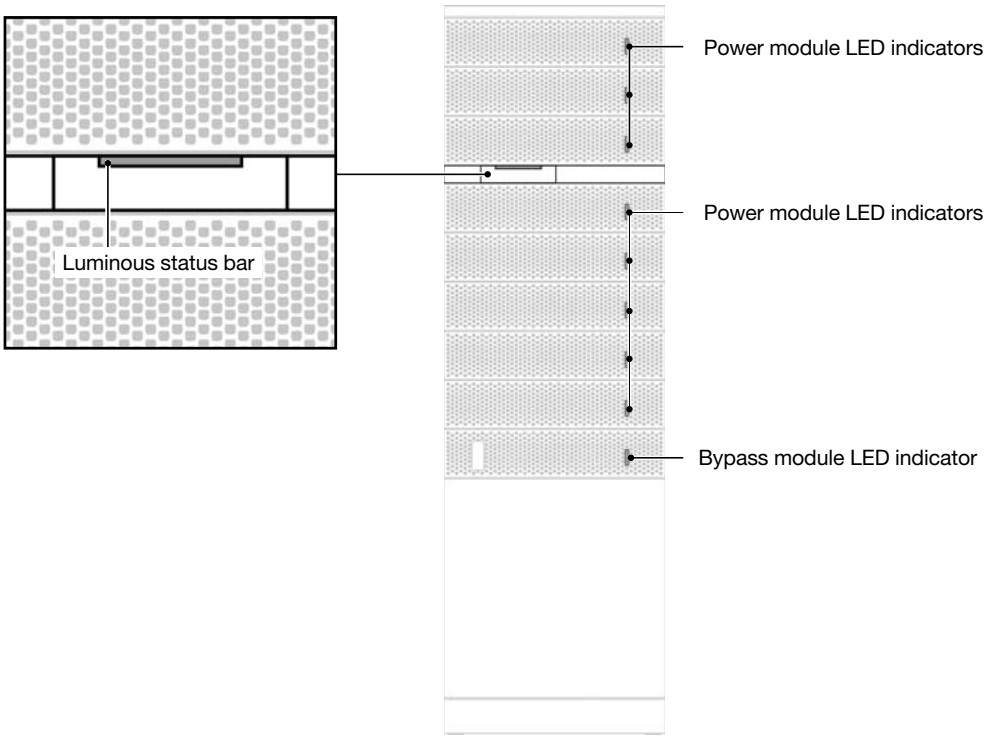

LED indicator		
Colour	Power module	Bypass module
Green	Module on inverter	Bypass ready to start
Flashing green	-	Load on bypass
Yellow	Module ready to start	Maintenance bypass
Flashing yellow	Module initialising	Load on inverter or bypass and transfer impossible/locked
Red	Module stopped due to alert	Bypass alert present
Flashing red	Initialising failure	Bypass blocked with alert
Flashing green yellow and red	No communication	No communication

Control panel luminous status bar indicator	
Colour	Status
Green	Load protected on inverter
Flashing green	UPS in startup procedure phase or battery test
Yellow	Load supplied with warning (Bypass, maintenance bypass or battery)
Flashing yellow	Maintenance request/in progress
Flashing green and yellow	Load supplied and preventive alert present
Red	Load not supplied: output switched OFF due to an alert
Flashing red	Load supplied, but the output will stop in few minutes (imminent stop)
Flashing yellow and red	Load supplied, but no more protected A critical alert has occurred
Flashing green yellow and red	No communication

6-2 Control panel extraction

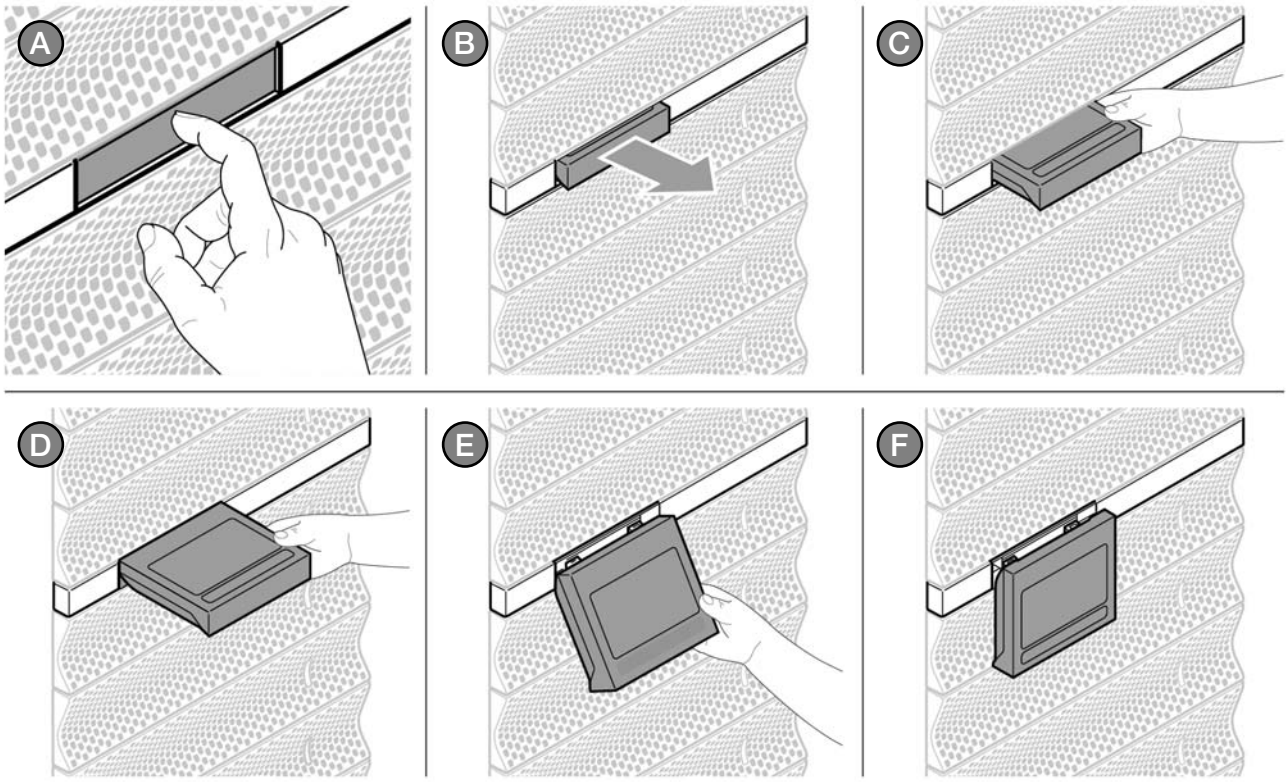

6-3

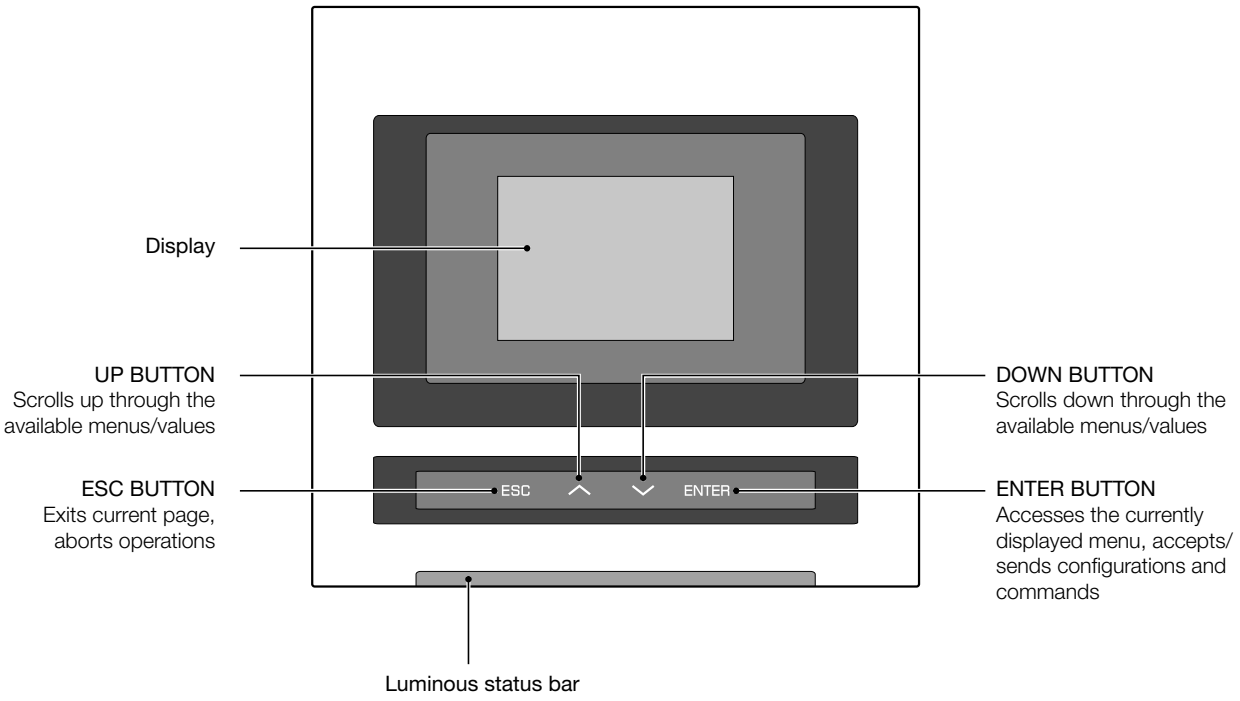

7. MENU

7.1. DISPLAY OVERVIEW

7.1-1 Status bar

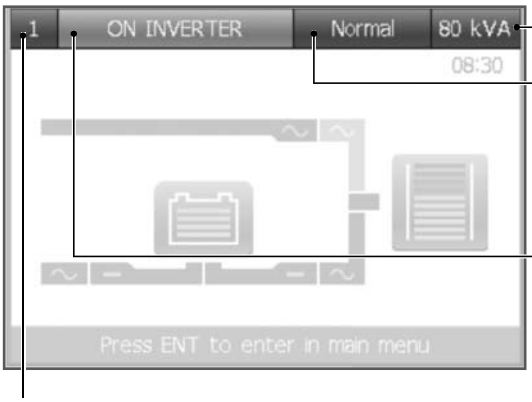

UPS Rated Power (kVA)

Operating modes:
Normal (Normal mode), **Service** (Maintenance Mode), **Isolated** (output breaker/relays open), **eco auto** (Eco mode), **eco** (Eco mode command executed), **Standby** (stand-by command executed), **e Saver** (Energy-Saver Mode)

Unit status:
- Displayed messages: UPS STARTING, UPS STOPPING, ON MAINT. BYPASS, IMMINENT STOP, ON BATTERY, BATTERY TEST, ON INVERTER, ON AUTO BYPASS, UNIT AVAILABLE, STANDBY, LOAD OFF.

Unit panel reference

Status bar color	
Flashing green/yellow/red	no information available
Green	load supplied
Flashing green	start procedure in progress/battery test in progress
Yellow	on battery/forced on bypass (with eco mode off)/maintenance alert/redundancy lost
Flashing yellow	bypass procedure in progress/maintenance period expired/maintenance mode/bypass mode with an alert present
Red	load not supplied
Flashing red	stop procedure in progress/output supply switch-off is imminent
Flashing yellow/red	load supplied but no protected
Flashing green/yellow	maintenance alert/an alert is present with load supplied by the inverter
Grey (off)	inactive UPS

7.1-2 Alerts area and Message area

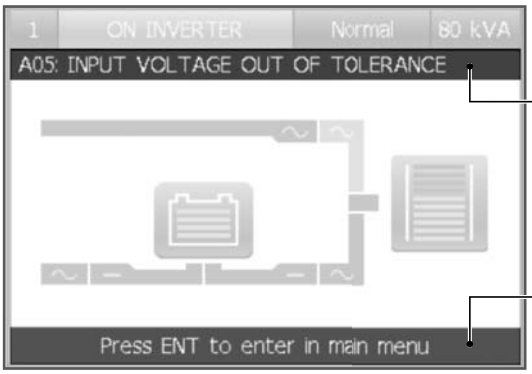

Alerts area
Present when an alert is active.
Enter **ALARMS** menu to display the complete alerts list.

Message area
Always present, displays a help message to guide the user through the display functions.

7.1-3 Status icons

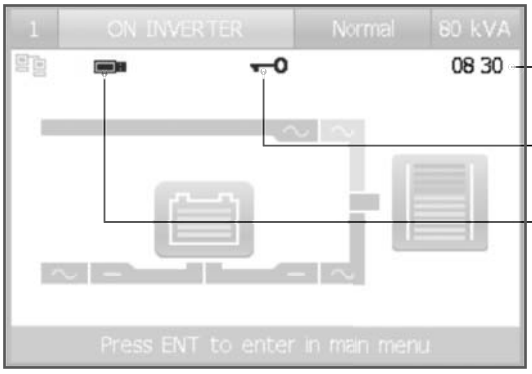

Note: status icons and Time are only visible if there are no pending alerts, as the alert bar overwrites the icons when active.

Time:
UPS current time (hours and minutes, with ':' flashing).

Key icon:
Displayed if the keypad has been locked.

USB icon:
Displayed if a USB memory stick is inserted.
It must be formatted with FAT32 filesystem.

7.1-4 Additional Icons

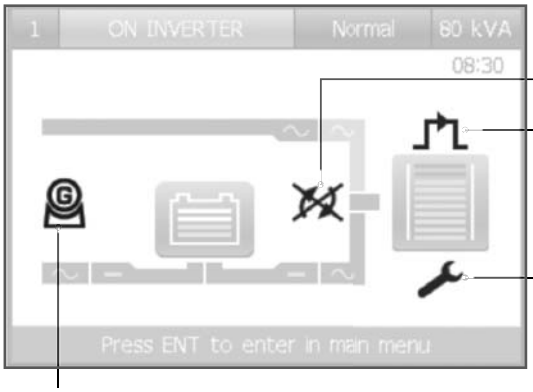

On Maintenance Bypass

Bypass mode (or Eco Mode) not possible

Commissioning Code not inserted (refer to 'Menu functions description' paragraph) or Scheduled Inspection warning: machine inspection required call SOCOMEC support service

Operating on GenSet

7.1-5 Mimic panel

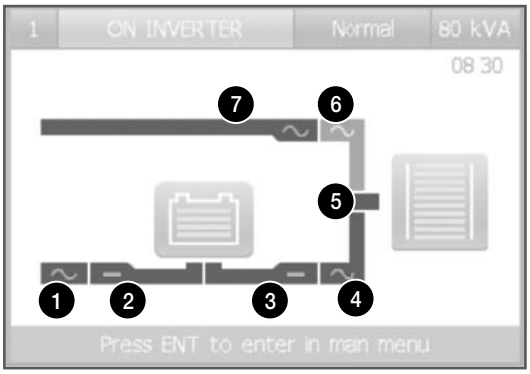

Bars
1. Rectifier input.
2. Rectifier output.
3. Inverter Input or Battery Output.
4. Inverter Output.
5. Unit output.
6. Output from static switch
7. Bypass input.

Bar colour identify the energy flow:
- **blue:** active/mains present
- **grey:** mains not present

7.1-6 Load level

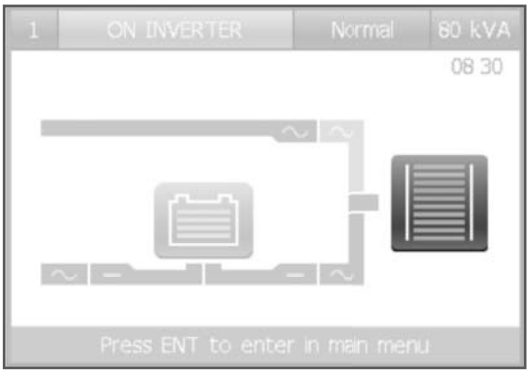

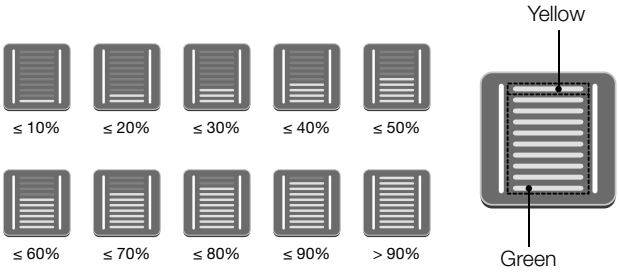

7.1-7 Battery status

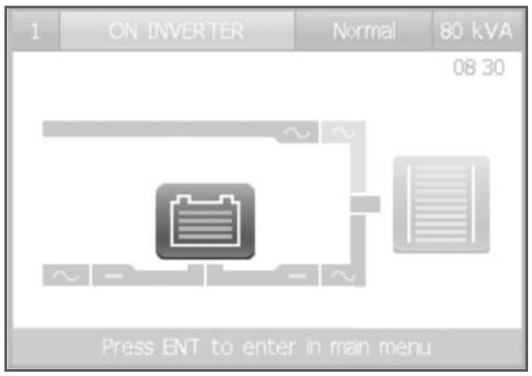

Battery charging
Bar colour: green; level reached is continuous, other levels flashing

Battery charging
Bar colour: green; level reached is continuous, other levels flashing

Battery charged
Bar colour: green

Battery discharged

Battery open

Battery alert
If there is a pending battery charger alert the border turns yellow

7.2. MENU TREE

FIRST LEVEL	SECOND LEVEL	THIRD LEVEL
ALARMS	UNIT	
	MODULE 1[1]	
	MODULE 2[1]	
	MODULE 3[1]	
	MODULE 4[1]	
	MODULE 5[1]	
	MODULE 6[1]	
	MODULE 7[1]	
	MODULE 8[1]	
	BYPASS	
MEASUREMENTS	OUTPUT	
	BATTERY	
	INPUT	
	BYPASS	
	SUBUNIT	
CONTROLS	ALARMS RESET	
	PROCEDURES	
	FUNCTIONING MODE	
	BATTERY TEST	
SETTINGS	PREFERENCES	LANGUAGE
		DATE AND TIME
		BUZZER
		DISPLAY
		PASSWORD
	UPS SETTINGS	OUTPUT
		BATTERIES
		TRANSFORMER
		BACKFEED
		PARALLEL SYSTEM
	SLOT OPTIONS	WEB/SNMP CARD
		TEMPERATURE PROBE
		RS485 PORT 1
		RS485 PORT 2
HISTORY LOG	EVENTS LOG	
	STATISTICS	
SERVICE	DEVICE IDENTIFICATION	
	FIRMWARE VERSION	
	UPGRADE LANGUAGES	
	COMMISSIONING CODE	
	MAINTENANCE CODE	
	SERVICE COMMANDS	
	ETHERNET	

1. Displayed if the module is present.

7.3. MENU FUNCTIONS DESCRIPTION

KEYPAD LOCKING

The keypad can be locked by pressing the buttons in the following sequence:
ESC → UP → DOWN → ENTER
To unlock the keypad, the buttons must be pressed in the reverse sequence:
ENTER → DOWN → UP → ESC
These sequences work only on Mimic Panel page.

7.3-1

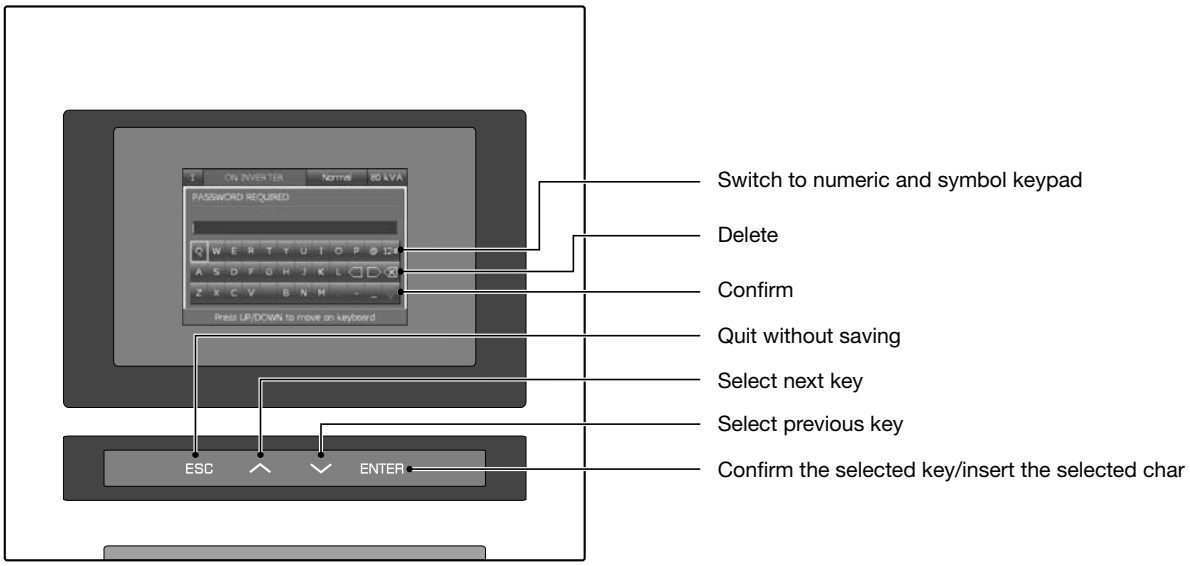

ENTERING PASSWORDS

Some operations and settings require a password in order to be performed. If this is the case, a padlock is displayed at the top right of the page. After inserting a valid password, the padlock opens and the operation can be performed. When a password is required, a virtual keyboard is displayed. The default password is **SOCO**.

ALARMS menu

This menu displays all pending UPS alerts. Use the **ALARMS RESET** command in the **COMMANDS** menu to reset alerts. If there is more than one page, press UP/DOWN to scroll pages.

MEASUREMENTS menu

This menu displays all UPS measurements relating to the input stage, output stage, batteries and auxiliary mains (bypass). If there is more than one page, press UP/DOWN to scroll pages.

COMMANDS menu

This menu contains the commands that can be sent to the UPS. Some of them are password protected.

If a command is not available, a **COMMAND FAILURE** message appears.

SETTINGS menu

This menu contains all the machine settings. There are the following sub-menus:

- **PREFERENCES**: user preferences such as language, date and time, display brightness, buzzer;
- **UPS SETTINGS**: critical machine settings for output, batteries and transformer.

Wrong configuration in UPS SETTINGS could damage the load or the batteries.

- **SLOT OPTIONS**: configurations of available optional boards, which can be fitted to the front slots.

System critical parameters are password protected and should be changed by specialist personnel only.

BATTERY SETTINGS menu

This is the menu for battery configuration. The list can be scrolled through to see the full list of battery settings. If batteries are not available, only the first element of the list is shown. When one of the battery settings is edited, all settings below in the list have to be checked and confirmed. The battery settings are saved only when the last battery setting is confirmed. To change battery configurations enter the menu: **MAIN MENU > SETTINGS > UPS SETTINGS > BATTERIES**.

In the case of UPSs connected in parallel enter the menu: **UNIT MENU > BATTERY SETTINGS**.

These parameters for battery settings are critical: number of cells, capacity, charge current. Risk of damage to load or batteries.

HISTORY LOG menu

EVENT LIST menu: it shows the list of UPS alerts and events that have occurred. Last 150 events can be displayed. Press UP/DOWN to scroll the list.

STATISTICS menu: the system reports some measurements (output load, input apparent power, internal temperature) in graphical format. These values can be used to analyse the situation over the last 14 days or in shorter periods (last 24 hours, last hour or last minute). Enter the required menu and press UP/DOWN to scroll through different periods. The last page shows the minimum, maximum and average values of the selected measurement. This information provides an enhanced evaluation of the equipment operating mode, verifying whether certain critical operating situations are repetitive or only random.

SERVICE menu

This menu is reserved for support service personnel and holds UPS identification data, utilities for SW upgrades.

COMMISSIONING CODE

To complete equipment activation, a warranty activation code is required. To insert the **Commissioning Code** go to **MAIN MENU > SERVICE > COMMISSIONING CODE**.

If the **Commissioning Code** is not inserted an alert symbol is shown on mimic panel (🔧).

The **Commissioning Code** is provided directly by the relevant Support Centre upon communication of the serial number. When the Support Centre is contacted for the **Commissioning Code**, detailed information can be obtained on the UPS functions available and on scheduled preventive maintenance programmes.

LANGUAGE UPGRADE

Text translations in several languages are held in files with the *.lng extension which are provided by SOCOMEC. Language upgrades must be performed through the USB port, using a standard USB memory stick. The USB device must be formatted with FAT32 file system.

Step 1

The language file to be installed must be copied onto a USB stick and placed in the standard folder:

{USB stick}\SOCOMEC\AOMI

Step 2

Insert the USB stick into the UPS USB port on the inside of the UPS door.

Step 3

A menu appears with the USB services. Choose **UPGRADE LANGUAGES** or enter the menu: **MAIN MENU > SERVICE > UPGRADE LANGUAGES**. When on a parallel system the SYS unit has to be selected beforehand on the mimic panel page.

Step 4

The list of files in the **\SOCOMEC\AOMI** folder in the USB memory stick is shown. Select the file you want to upload and follow the instructions displayed.

Step 5

At the end of the process, select **YES** to restart the display.

Step 6

Remove the USB stick when requested.

Step 7

The new language is available after restarting. If the display doesn't restart automatically choose the **RESTART DISPLAY** command in **COMMANDS** menu. To change the language go to the **MAIN MENU > PREFERENCES > LANGUAGE**.

Note: to restore English as the default language press the ESC button for at least 4 seconds on the mimic panel page.

8. OPERATING PROCEDURES

NOTE!
Before carrying out any operations on the unit read the Safety standards chapter carefully.

NOTE!
With the stop procedure the load will be disconnected.

8.1. SWITCHING ON

- Connect the mains and auxiliary mains to the UPS.
- Put switch **Q1** (or the external input mains switching device) into position **1**.
- Wait for the display to switch on.
- Enter **MAIN MENU > COMMANDS > UPS PROCEDURES**.
- Select **Automatic Start Procedure** and press **ENTER**.
- Carry out the operations indicated on the display.

8.2. SWITCHING OFF

This operation interrupts the power supply to the load The UPS and the battery charger will be shutdown.

- Enter menu **MAIN MENU > COMMANDS > UPS PROCEDURES**.
- Select **Automatic Stop Procedure** and press **ENTER**.
- Wait approx. 2 minutes for the UPS shutdown.

NOTE!
The controlled shutdown of each server connected to the LAN can be managed by shutdown software.

- Carry out the operations indicated on the display. This operation cannot be aborted.

8.3. BYPASS OPERATIONS

SWITCHING ONTO MAINTENANCE BYPASS

This operation creates a direct connection between the UPS input and output, excluding the equipment control part. This operation is performed in the event of:

- standard maintenance
- serious failure has occurred.

WARNING! LOAD POWERED BY INPUT MAINS!
Your load is exposed to mains disturbances.

- Enter menu **MAIN MENU > COMMANDS > UPS PROCEDURES**.
- Select **ON MAINT. BYPASS** and press **ENTER**.
- Carry out the operations indicated on the display.

NOTE!
When an external manual bypass is present:
- carry out the procedure described above;
- put the switch to position 1.

ENGLISH

SWITCHING ON FROM MAINTENANCE BYPASS

- Put switch **Q1** (or the external input mains switching device) into position **1**.
- Wait for the display to switch on.
- Enter menu **MAIN MENU > COMMANDS > UPS PROCEDURES**.
- Select **Automatic Start Procedure** and press **ENTER**.
- Carry out the operations indicated on the display.

NOTE!
When an external manual bypass[1] is present, put the switch to position 0 (OFF).

1. Not monitored by the UPS or by the parallel system.

8.4. EXTENDED OUT OF SERVICE

When the UPS is deactivated for some time, the batteries must be recharged regularly.
They have to be recharged every three months.

- Connect the mains and auxiliary mains to the UPS.
- Put switch **Q1** into position **1**.
- Wait for the display to switch on.
- Close the external battery breaker/fuses.
- Put or keep switch **Q6**/**Q5** in position **0**.
- The battery must be charged for at least ten hours.
- Once ten hours have elapsed, open the external battery breaker/fuses.
- Put switch **Q1** into position **0**.

8.5. EMERGENCY SHUTDOWN

NOTE!
This operations interrupts the supply to the output load from both inverters and automatic bypass.

UPS POWER OFF

- System with manual bypass and input, aux mains, output switches: put **Q6** to position **0** when it's necessary to interrupt the power supply quickly. Refer to figure 8.5-1.
- System with manual bypass and output switch: push the electronic 'UPS Power Off' button when it is necessary to interrupt the power supply quickly. Refer to figure 8.5-2.

8.5-1

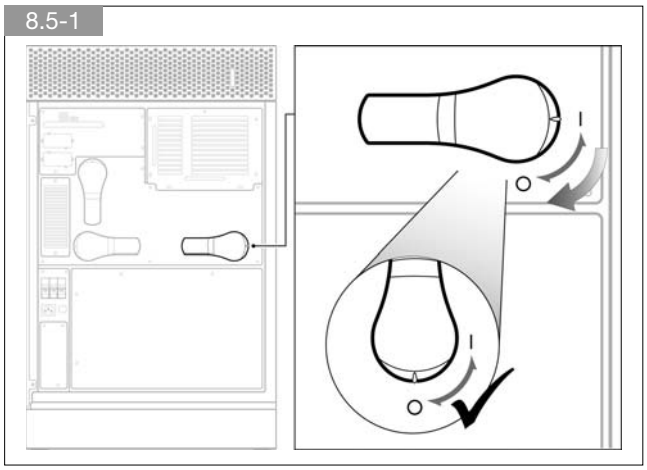

8.5-2

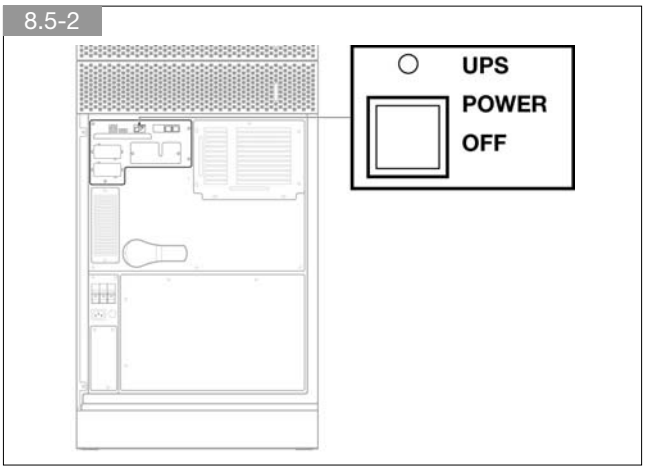

REMOTE UPS POWER OFF

It is possible to interrupt the power supply to the output load using the ADC board. Refer to 'Standard features and options' chapter.

9. OPERATING MODES

9.1. ON LINE MODE

A special feature of the UPS is the ONLINE double conversion in conjunction with low distortion mains power absorption. In ON LINE mode, the UPS can supply a voltage that is fully stabilised in frequency and amplitude, regardless of any interference in the mains power supply, within the most stringent classification of UPS regulations.

ONLINE operation provides three operating modes according to mains and load conditions:

• **Inverter mode**

This is the most frequent operating condition: energy is drawn from the primary mains power supply and converted and used by the inverter to generate the output voltage to power the connected loads.

The inverter is constantly synchronised in frequency with the auxiliary mains to enable load transfer (due to an overload or inverter shutdown) without any break in the power supply to the load.

The battery charger supplies the energy required to maintain or recharge the battery.

• **Bypass mode**

In the event of inverter failure, the load is automatically transferred onto the auxiliary mains without any interruption in the power supply.

This procedure may occur in the following situations:

- in the event of a temporary overload, the inverter continues to power the load. If the condition persists, the UPS output is switched
- on to the auxiliary mains via automatic bypass. Normal operation, which is from the inverter, returns automatically a few seconds after the overload disappears.
- When the voltage generated by the inverter goes outside the limits due to a major overload or a fault on the inverter.
- When the internal temperature exceeds the maximum value allowed.

• **Battery mode**

In the event of a mains failure (micro interruptions or extended power cuts), the UPS continues to power the load using the energy stored in the battery.

9.2. HIGH EFFICIENCY MODE

The UPS has a selectable, programmable economy operating mode (ECO MODE) that can increase overall efficiency by up to 99% for energy saving purposes. If the power supply fails, the UPS will automatically switch onto the inverter and continue to supply power to the load by drawing energy from the battery.

This mode does not provide perfect stability in frequency and voltage like the NORMAL MODE. Therefore the use of this mode should be carefully evaluated according to the level of protection required by the application. With the optional board Net Vision specific daily or weekly time intervals can be selected and programmed to power applications directly from the auxiliary mains.

ECO MODE operation provides very high efficiency, since the application is powered directly from the auxiliary mains via the automatic bypass under normal operating conditions.

To activate follow the correct procedure in the control panel.

9.3. CONVERTER MODE

In converter mode the UPS can supply a fully stabilised sinusoidal output voltage with a different frequency from the input power line (50Hz or 60Hz is available as output frequency value).

NOTE!
Only set this mode on UPS units with the auxiliary mains (AUX MAINS) disconnected! Do not set this mode on UPS units with common mains lines as it could damage the load!

ENGLISH

9.4. OPERATION WITH MAINTENANCE BYPASS

If the internal maintenance bypass is activated using the appropriate procedure, the load is powered directly from the maintenance bypass, while the UPS is separate from the power supply and can be switched off.

This operating mode can be selected for maintenance to be carried out on the system, so that the necessary actions can be performed by service personnel without having to disconnect the power supply to the load.

9.5. OPERATION WITH MOTOR GENERATOR (GENSET)

The UPS can be operated in conjunction with a generator (GENSET) over the ADC interface (refer to 'Standard features and option' chapter). With a generator, the frequency and voltage ranges of the auxiliary mains can be increased to accept the instability of the GE and at the same time to avoid operation from the battery or risks of out-of-synchronisation switching on to the bypass.

10. STANDARD FEATURES AND OPTIONS

ADC CARD

This card can be configured to control four outputs and three digital inputs. The first output can be configured as normally open (NO) or normally closed (NC). The other three outputs are configured as normally open (NO).

A maximum of two cards can be installed on each unit. If more than one ADC card is used simultaneously, the configurations must be different. The card must be inserted in slot S1 or S2.

All the configurations have to be selected only by SOCOMEC service personnel through SOCOMEC maintenance software.

• Electrical data

- Permitted Nominal current and voltage of NO or NC contacts: 4 A 250 Vac

- Inputs are activated on loop closing or opening depending on the configuration.

• External UPS power OFF connection

A remote shutdown system command (UPS power OFF) can be installed by means of the optional ADC card. Connect a zero-potential contact to terminals IN1+ and IN1- of the ADC card. The UPS power OFF input is normally disabled. It can be enabled only by SOCOMEC service personnel.

• Connection of the generator

If your system uses a generator connect the 'generator set ready' no-potential contact to connector IN 2 on the optional ADC card configured in standard or power safe mode. This automatically extends the voltage and frequency value range when power is supplied by the generator set.

10-1

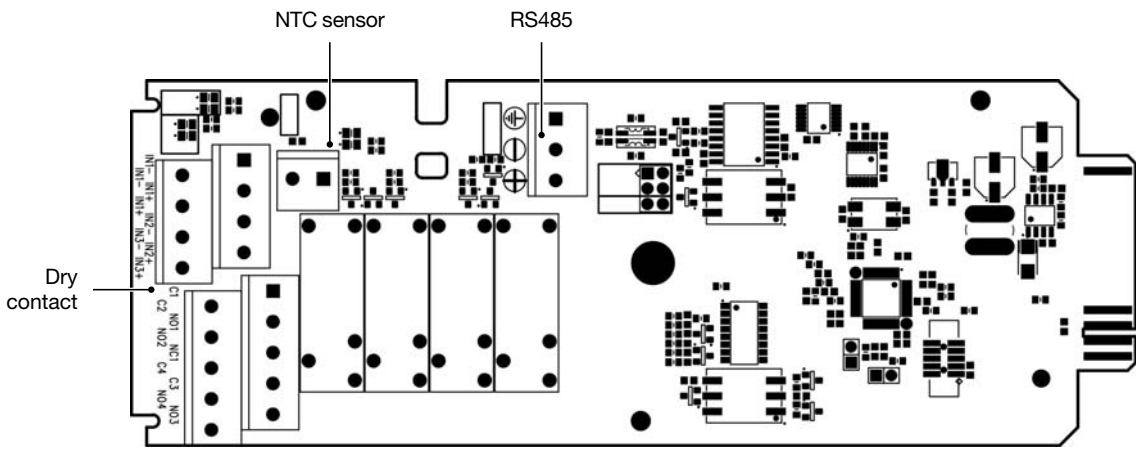

EXTERNAL TEMPERATURE SENSOR

The ADC card has the possibility of connecting an external NTC sensor, to measure the external battery cabinet temperature.

RS485

The ADC card also has a RS485 serial port to connect an external device.

NET VISION CARD

NET VISION is a communication and management interface designed for business networks. The UPS behaves exactly like a networked peripheral, it can be managed remotely, and allows the shutdown of network workstations.

NET VISION allows a direct interface between the UPS and LAN network avoiding dependence on the server and support SMTP, SNMP, DMCP and many other protocols. it interacts via the web browser

11. MAINTENANCE

NOTE!
Before carrying out any operations on the unit read the Safety standards chapter carefully.

NOTE!
Any work carried out on the equipment must be performed by qualified technicians authorised by SOCOMEC.

Routine maintenance carried out annually is recommended in order to provide optimum operating efficiency and avoid dequipment downtime.

Maintenance consists of thorough functionality checks on:

- electronic and mechanical parts;
- dust removal;
- battery inspection;
- software updating;
- environmental checks.

BATTERIES

The condition of the battery is fundamental to UPS operation.

During the operating lifetime of the battery, the UPS stores statistics on the conditions of use of the battery for analysis.

The expected life time of the batteries is very much dependent on operating conditions:

- number of charging and discharging cycles;
- load rate;
- temperature.

NOTE!
Batteries must only be replaced with batteries recommended or sold by the manufacturer. Batteries must only be replaced by qualified technicians.

BEWARE!
Used batteries contain harmful substances. Do not open the plastic cover!

NOTE!
Used batteries have to be placed in the appropriate containers to avoid leakage acid.
They should only be entrusted to a specialist waste disposal company.

FANS & CAPACITORS

The lifespan of consumable parts such as fans and capacitors (AC and DC) depends on whether or not the use and environmental conditions (premises, usage or load type) are abnormal or harsh for the equipment.

It is advisable to replace consumables as follows[1]:

Consumable part	Years
Fan	5
DC capacitor	5

1. Based on operation of the unit according to the manufacturer's specification.

12. TECHNICAL SPECIFICATIONS

Number of modules			1	2	3	4	5	6	7	8
Power		kW	25	50	75	100	125	150	175	200
Power		kVA								
Input										
Input mains voltage			3ph + N 340 V to 480 V (+20/-15%) up to -40% @ 50% of nominal load							
Input mains frequency		Hz	50/60 +/-10%							
Input power factor			≥ 0.99[1]							
Total harmonic input current distortion (THDi)			≤ 3% (@: Pn, Resistive load, Mains THDv ≤ 1%)							
Output										
Output voltage (three phase + neutral)		V	380/400/415[2] selectable							
Frequency		Hz	50/60 selectable							
Total output voltage distortion (THDv)		%	≤ 1% (Ph/Ph); ≤ 2% (Ph/N) (@: Pn, Resistive load)							
Overload[3]	• 10 min	kW	27,5	55,0	82,5	110,0	137,5	165,0	192,5	220,0
	• 5 min		31,3	62,5	93,8	125,0	156,3	187,5	218,8	250,0
	• 1 min		33,8	67,5	101,3	135,0	168,8	202,5	236,3	270,0
	• 30 s		37,5	75,0	112,5	150,0	187,5	225,0	262,5	300,0
Crest Factor			≥ 2.7							
Bypass										
Bypass input voltage		V	Nominal output voltage ±15% (±20% if GENSET is used)							
Bypass input frequency		Hz	50/60 +/-2% selectable (±8% if GENSET is used)							
Stored energy mode of operation										
Number of battery blocks (VRLA)			From 18+18 to 24+24							
Environmental										
Operating temperature		°C	0 to 40 °C[4][5]							
Storage temperature		°C	-5 to +50 °C							
Relative humidity		%	95% condensation-free							
Altitude (max)		m	1000 (3000 with derating)							
Acoustic noise at 1m		dBA	52	52	55	55	55	56	58	58
Required cooling capacity		m^3/h	400	800	1200	1600	2000	2400	2800	3200
Dissipated power (max)		W	1500	3000	4500	6000	7500	9000	10500	12000
Dissipated power (max)		BTU/h	5120	10240	15360	20480	25600	30720	35840	40960
Dimensions and Weight										
Dimensions (W x D x H)		mm	600 x 890 x 1975							
Empty cabinet		kg	228							
UPS module		kg	33							
Bypass module		kg	25							
Standard										
Safety			IEC 62040-1							
EMC			IEC 62040-2 (C2)							
Performance			IEC 62040-3 (VFI-SS-111)							
Product Certifications			CE – TUV SÜD							
Degree of protection standard			IP20							

1. Pout ≥ 50% Sn.
2. 360 V with Pout = 90% Pn.
3. Initial Condition Pout ≤ 80% Pn
4. For best battery lifetime the suggested temperature range is 15 °C ÷ 25 °C.
5. According to EN62040-3

ENGLISH

Socomec **worldwide**

IN EUROPE

BELGIUM
UPS / Power Control & Energy Efficiency / Solar
Tel. +32 2 340 02 30
Fax +32 2 346 28 99
info.be@socomec.com

FRANCE
UPS / Power Control & Energy Efficiency / Solar
Tel. +33 1 45 14 63 00
Fax +33 1 48 67 31 12
dcm.ups.fr@socomec.com

GERMANY
Power Control & Energy Efficiency
Tel. +49 7243 65292 0
Fax +49 7243 65292 13
info.scp.de@socomec.com
UPS
Tel. +49 621 71 68 40
Fax +49 621 71 68 444
info.ups.de@socomec.com

ITALY
Power Control & Energy Efficiency
Tel.+39 02 98 49 821
Fax +39 02 98 24 33 10
info.scp.it@socomec.com
Solar
Tel. +39 0444 598611
Fax +39 0444 598627
info.solar.it@socomec.com
UPS
Tel.+39 02 98 242 942
Fax +39 02 98 240 723
info.ups.it@socomec.com

NETHERLANDS
UPS / Power Control & Energy Efficiency / Solar
Tel. +31 30 760 0900
Fax +31 30 637 2166
info.nl@socomec.com

POLAND
Power Control & Energy Efficiency
Tel. +48 91 442 64 11
Fax +48 91 442 64 19
info.scp.pl@socomec.com
UPS
Tel. +48 22 825 73 60
Fax. +48 22 825 73 60
info.ups.pl@socomec.com

PORTUGAL
UPS / Solar
Tel.+351 261 812 599
Fax +351 261 812 570
info.ups.pt@socomec.com

ROMANIA
UPS / Power Control & Energy Efficiency / Solar
Tel. +40 21 319 36 88
Fax +40 21 319 36 89
info.ro@socomec.com

RUSSIA
UPS / Power Control & Energy Efficiency / Solar
Tel. +7 495 775 19 85
Fax +7 495 775 19 85
info.ru@socomec.com

SLOVENIA
UPS / Power Control & Energy Efficiency / Solar
Tel. +386 1 5807 860
Fax +386 1 561 11 73
info.si@socomec.com

SPAIN
UPS / Power Control & Energy Efficiency / Solar
Tel. +34 93 540 75 75
Fax +34 93 540 75 76
info.es@socomec.com

UNITED KINGDOM
Power Control & Energy Efficiency
Tel. +44 1462 440 033
Fax +44 1462 431 143
info.scp.uk@socomec.com
UPS
Tel.+44 1285 863 300
Fax+44 1285 862 304
info.ups.uk@socomec.com

TURKEY
UPS / Power Control & Energy Efficiency / Solar
Tel. +90 216 540 71 20-21-22
Fax +90 216 540 71 27
info.tr@socomec.com

IN ASIA PACIFIC

AUSTRALIA
UPS
Tel. +61 2 9325 3900
Fax +61 2 9888 9544
info.ups.au@socomec.com

CHINA
UPS / Power Control & Energy Efficiency
Tel. +86 21 52 98 95 55
Fax +86 21 62 28 34 68
info.cn@socomec.com

INDIA
Power Control & Energy Efficiency
Tel. +91 124 4027210
Fax +91 124 4562738
info.scp.in@socomec.com
UPS / Solar
Tel. +91 44 39215400
Fax +91 44 39215450 & 51
info.ups.in@socomec.com
info.solar.in@socomec.com

SINGAPORE
UPS / Power Control & Energy Efficiency
Tel.+65 6506 7600
Fax +65 64 58 7377
info.sg@socomec.com

THAILAND
UPS
Tel. +66 2 941 1644 7
Fax +66 2 941 1650
info.ups.th@socomec.com

VIETNAM
UPS
Tel. +84 8 3559 1220
Fax +84 8 3559 1221
info.ups.vn@socomec.com

IN MIDDLE EAST

UNITED ARAB EMIRATES
UPS / Power Control & Energy Efficiency / Solar
Tel.+971 4 29 98 441
Fax +971 4 29 98 449
info.ae@socomec.com

IN AMERICA

USA, CANADA & MEXICO
Power Control & Energy Efficiency
Tel. +1 617 245 0447
Fax +1 617 245 0437
info.us@socomec.com

OTHER COUNTRIES

NORTH AFRICA
Algeria / Morocco / Tunisia
info.naf@socomec.com

AFRICA
Other countries
info.africa@socomec.com

SOUTH EUROPE
Cyprus / Greece / Israel / Malta
info.se@socomec.com

SOUTH AMERICA
Tel. +34 93 540 75 75
info.es@socomec.com

MORE DETAILS
www.socomec.com/worldwide

HEAD OFFICE

SOCOMEC GROUP
S.A. SOCOMEC capital 10 816 800€
R.C.S. Strasbourg B 548 500 149
B.P. 60010 - 1, rue de Westhouse
F-67235 Benfeld Cedex - FRANCE
Tel. +33 3 88 57 41 41
Fax +33 3 88 74 08 00
info.scp.isd@socomec.com

YOUR DISTRIBUTOR

IOMMODGPXXO5-GB 01 11.2014

www.socomec.com

ENERGY SPECIALIST SINCE 1922

socomec
Innovative Power Solutions